AXMINSTER PROFESSIONAL

AP406SS Code 107653
AP535SS Code 107654

Original Instructions

AP406SS, AP535SS
Scroll Saws

AP406SS
(KC-16)

AP535SS
(KC-21)

Watch The Set Up Guide Here!

The symbols below advise the correct safety procedures when using this machine.

Fully read manual and safety instructions before use

Ear protection should be worn

Eye protection should be worn

Dust mask should be worn

HAZARD

AT:30/07/2025
BOOK VERSION: 9

INDEX OF CONTENTS

Rules For Safe Operation	03
Safety Instructions	04
Electrical Requirements	05
Identification of Main Parts & Components	06
Unpacking & Set Up	07
Installation & Assembly	07-08
Choosing & Installing a Saw Blade	08-09-10
Operating Instructions	11-12-13
Maintenance, Adjustments & Servicing	14-15
Changing the Fuse	15
Specifications	15
Stand Assembly	16-17
Exploded Diagrams/Lists	
KC-16, KC-21Exploded Diagram (A)	18-19
KC-16, KC-21Exploded Diagram (B)	20-21
KC-16, KC-21Exploded Diagram (C)	22-23
Base Mounting Holes	24
Wiring Diagram	25

Object of the Declaration: Axminster Workshop AW405SS Scroll Saw (108360)

UK:
Supply of Machinery (Safety) Regulations 2008 as amended
Electromagnetic Compatibility Regulations 2016 as amended

EU:
Machinery Directive 2006/42/EC
EMC Directive 2014/35/EU

UK Address:
Axminster Tool Centre Ltd
Weycroft Avenue
Axminster. Devon
EX13 5PH

European Address:
Axminster Tool Centre Ltd
A-201. Haagsche Hof
Parkstraat 83
The Hague
2514 JG
Netherlands

Standards used or references to the other technical specifications in relation to which conformity is declared:
ISO 12100:2010, EN 60204-1:2018, ISO 19085-1:2021
IEC 55014-1:2021, IEC 55014-2:2021, IEC 61000-3-2:2019+A1, 61000-3-3:2013+A1+A2

Date: 7/29/2025
Place: Axminster

Ian Styles
Product Director

Object of the Declaration: Axminster Professional AP535SS Scroll Saw (107654)

UK:
Supply of Machinery (Safety) Regulations 2008 as amended
Electromagnetic Compatibility Regulations 2016 as amended

EU:
Machinery Directive 2006/42/EC
EMC Directive 2014/35/EU

UK Address:
Axminster Tool Centre Ltd
Weycroft Avenue
Axminster. Devon
EX13 5PH

European Address:
Axminster Tool Centre Ltd
A-201. Haagsche Hof
Parkstraat 83
The Hague
2514 JG
Netherlands

Standards used or references to the other technical specifications in relation to which conformity is declared:
ISO 12100:2010, EN 60204-1:2018, ISO 19085-1:2021
IEC 55014-1:2021, IEC 55014-2:2021, IEC 61000-3-2:2019+A1, 61000-3-3:2013+A1+A2

Date: 7/29/2025
Place: Axminster

Ian Styles
Product Director

To help ensure safe operation, please take a moment to learn the machine's applications and limitations, as well as potential hazards. Axminster Tools disclaims any real or implied warranty and holds itself harmless for any injury that may result from the improper use of its equipment.

1. Be sure to read, understand and follow all safety warnings and instructions in the supplied Operator's Manual.

2. Do not operate the saw when tired, distracted, or under the effects of drugs, alcohol or any medication that impairs reflexes or alertness. Stay alert! Give your work your undivided attention.

3. Keep the work area well lit, clean and free of debris. Cluttered areas and benches invite injuries.

4. Keep children and shop visitors at a safe distance while operating the saw; do not permit them to operate the scroll saw.

5. Childproof and tamper proof your shop and all machinery with locks, master electrical switches and switch keys, to prevent unauthorised or unsupervised use. Fine particulate dust is a carcinogen that can be hazardous to health. Work in a well ventilated area and use a dust collector whenever possible.

7. Wear approved safety glasses, dust mask and nonskid footwear. Do not wear loose clothing, gloves, bracelets, necklaces or jewellery while operating the saw. Keep long hair contained by wearing protective hair covering.

8. Be sure all adjustment tools, wrenches or other clutter are removed from the machine and/or the table surface before operation. When not in use, tools should be locked-up in a dry place, out of children's reach and away from flammable substances.

9. Keep hands well away from saw blade and all moving parts. Use a brush, not hands, to clear away chips and sawdust.

10. Be sure that the saw blade is properly installed, and in the correct cutting direction, before operation. Always use a clean, properly sharpened blade. Dirty or dull blades are unsafe and can lead to accidents. Also, be sure the blade has gained full operating speed before beginning to cut.

11. Do not push or force wood into the blade. The saw will perform better and more safely when working at the rate for which it was designed. Do not use for purposes not intended.

12. Avoid working from awkward or off balance positions. Do not overreach while cutting; keep both feet on floor. Never lean over or reach behind the blade and never pull the work piece through the cut from behind.

13. Never stand or lean on the saw. Serious injury could occur if the unit is tipped over or if the blade is unintentionally contacted.

14. Use of parts and accessories NOT recommended by Axminster Tool Centre may result in equipment malfunction or risk of injury.

15. Never leave the machine unattended while running or with the power "ON".

16. Always turn off and disconnect from power source before servicing or changing accessories, blades, bits, and cutters, or before performing any maintenance or adjustments.

17. Make sure that switch is in the "OFF" position before plugging in the power cord. Do not use the saw if the power switch is defected, have defective switches replaced by an authorized service centre.

18. Make sure saw is properly grounded. If equipped with a three prong plug it should be used with a three-pole receptacle. Never remove the third prong. Avoid body contact with grounded surfaces (e.g. pipes, radiators, stoves, refrigerators).

19. Repairs to the saw should only be carried out by qualified people using original spare parts. A guard or other damaged part should be properly repaired or replaced by an authorized service centre.

20. Inspect power cords and extension wires periodically. If damaged, have them repaired by an authorized service facility. Never yank cords and wires and keep away from heat, oil, and sharp edges.

21. This tool is for indoor use only. Do not expose to rain or use in wet or damp locations.

Additional Safety Instructions Specific o the Scroll Saw

Because each shop situation Is unique, no list of safety guidelines can ever be complete.

The most Important safety feature In any shop Is the knowledge and good Judgement of the user. Use common sense and always keep safety considerations, as they apply to your individual shop situation first and oremost In mind. If you have any doubts about the safety of an operation you are about to perform: STOP! Do not perform the operation until you have validated from qualified ndividuals If the operation Is safe to perform and what Is the safest method to perform It.

1. Material hold-down must be properly set and remain In Position during use.

2. Never reach under the table when operating or make any adjustments while the scroll saw Is running.

3. Secure the saw to the work bench with clamps or mounting hardware.

4. Where possible, use clamps or a vice to secure your workplace. It Is safer than using your hand.

5. Do not lift or carry the saw by the upper arm.

6. Make sure blade tension Is properly adjusted.

7. Avoid awkward hand positions where a sudden slip could cause a hand to move Into the saw blade. Do not place fingers or hands in the path of the saw blade.

8. When removing short workplaces, or cleaning up around the table, be sure that the switch Is In the OFF position and that the blade has come to a complete stop.

9. Never turn the saw ON before making sure that the table Is clear except for the workplace and related feed or support devices for the operation planned.

10. Check for proper blade size and type.

11. Do not attempt to saw stock that does not have a flat surface unless a suitable support is used.

12. Turn off motor If the material resists being backed out of an Incomplete cut. Use appropriate speed for applications.

13. CAUTION: Some wood contains preservatives such as copper chromium arsenate (CCA) which can be toxic. When cutting these materials, extra care should be taken to avoid Inhalation and to minimize skin contact.

14. Always use a dust mask and safety glasses when sawing.

15. Keep guards In place and In working order.

16. Make sure your fingers do not contact the terminals of the power cord plug when plugging in or unplugging the saw.

17. Never overfeed or force work Into the blade.

18. Check for alignment and binding of all moving parts, broken parts, mounting and any other conditions that may affect the saw's operation.

19. Keep handles dry and free from oil and grease.

To avoid electrical shock, ensure machine Is properly grounded. Do not operate In damp conditions. Disconnect from power supply before servicing. Replace fuse with the same type and rating only - 3 Amp.

Be sure to read and understand owners manual before operating.

Before connecting the machine to the power source, verify that the voltage of your power supply corresponds with the voltage specified on the motor I.D. Nameplate. A power source with greater voltage than needed can result In serious injury to the user as well as damage to the machine. If in doubt, contact a qualified electrician before connecting to the power source.

This tool is for indoor use only. Do not expose to rain or use In wet or damp locations.

a

GROUNDING INSTRUCTIONS

In the event of an electrical malfunction or short circuit, grounding reduces the risk of electric shock. The motor of this machine Is wired for 240V single phase operation and Is equipped with a 3-conductor cord and a 3-prong grounded plug to fit a grounded type receptacle, **(a)**

Note: The use of an adaptor plug Is Illegal in some areas. Check your local codes.

DO NOT MODIFY THE PLUG PROVIDED.
If It will not fit your receptacle, have the proper receptacle Installed by a qualified electrician.

CHECK with a qualified electrician or service person If you do not completely understand these grounding Instructions, or If you are not sure the tool is properly grounded.

EXTENSION CORDS

USE ONLY 3-WIRE EXTENSION CORDS THAT HAVE 3-PRONG GROUNDING PLUGS AND 3-POLE RECEPTACLES THAT ACCEPT THE TOOLS' PLUG. REPAIR OR REPLACE A DAMAGED OR WORN POWER CORD OR PLUG IMMEDIATELY.

If you find It necessary to use on extension cord with your machine make sure the cord rating Is suitable for the amperage listed on the motor I.D. plate. An under sized cord will cause a drop in line voltage resulting In loss of power and overheating. The accompanying chart shows the correct size extension cord to be used based on cord length and motor I.D. plate amp rating. If In doubt, use the next heavier gauge. The smaller the number the heavier the gauge.

AMPERES (AMPS)	EXTENSION CORD LENGTH					
	25 FEET	50 FEET	75 FEET	100 FEET	150 FEET	200 FEET
<5	16	16	16	14	12	12
5 TO 8	16	16	14	12	10	NR
8 TO 12	14	14	12	10	NR	NR
12 TO 15	12	12	10	10	NR	NR
15 TO 20	10	10	10	NR	NR	NR
21 TO 30	10	NR	NR	NR	NR	NR

* Based on limiting the line voltage drop to 5V at 150% of the rated amperes.
NR = Not Recommended

IDENTIFICATION OF MAIN PARTS & COMPONENTS

16” 21” & SCROLL SAW

AP406SS, AP535SS

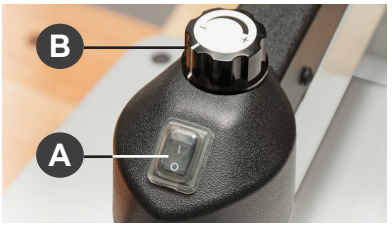

ON/OFF Switch (A)
Speed Control Dial (B)

NVR power isolating switch

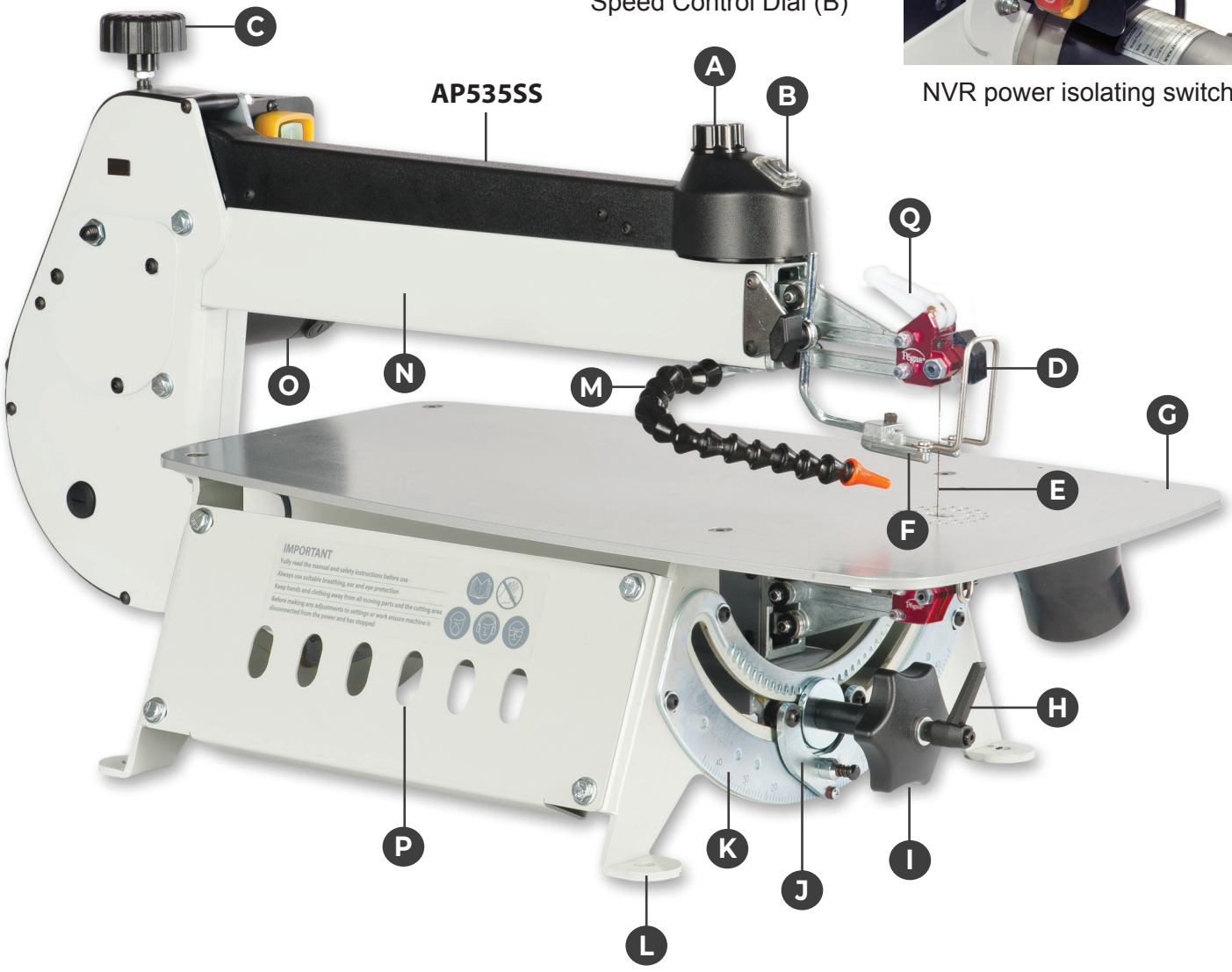

A	VARIABLE BLADE SPEED CONTROL KNOB
B	ON/OFF SWITCH
C	UPPER ARM TENSIONER
D	BLADE CLAMP
E	BLADE
F	WORKPIECE HOLD DOWN
G	TABLE
H	BLADE TILT LOCKING LEVER

I	TILT HANDLE
J	ANGLE INDICATOR
K	ANGLE ADJUSTMENT SCALE
L	MOUNTING HOLES (4)
M	BLOWER
N	UPPER ARM
O	MOTOR
P	BLADE HOLDER SOCKETS
Q	BLADE TENSION LEVER

UNPACKING

Carefully unpack and remove the scroll saw and its components from the box and check for missing or damaged Items as per the list of contents below.

Note: Please report any damaged or missing items to 'Axminster Tools Customer Service' on (Call: 03332 406 406)

LIST OF CONTENTS		Qty
A	SCROLL SAW	1
B	POWER CORD	1
C	3MM HEX KEY	1
D	BLADE	1

Once the parts have been removed from the packaging, you should have the following Items:

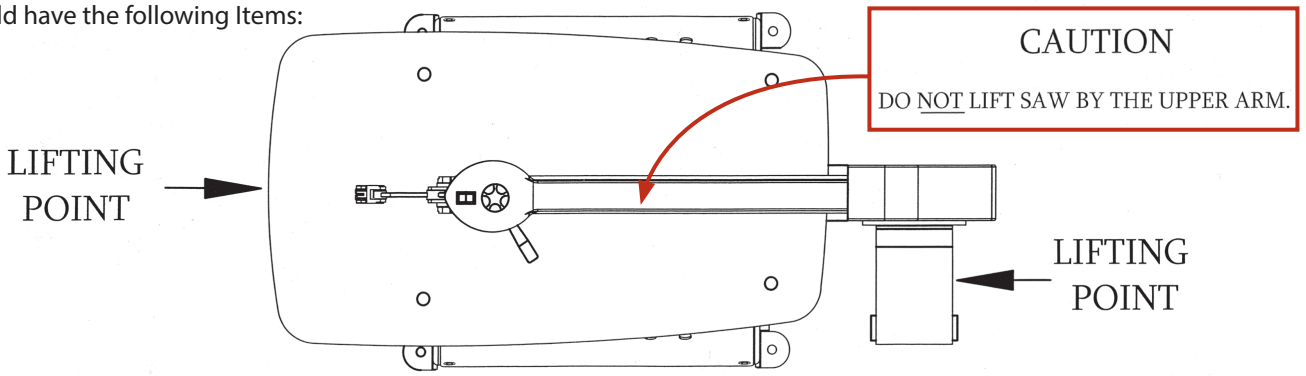

AP406SS (KC-16)

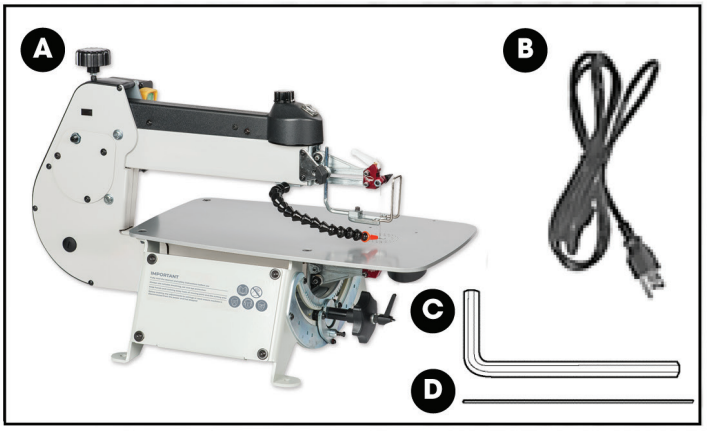

AP535SS (KC-21)

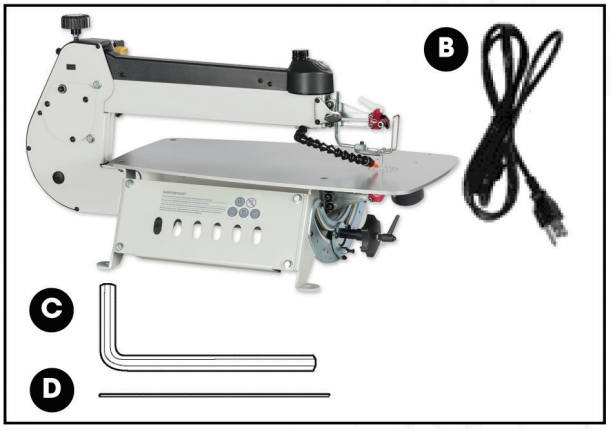

Unscrew the 4 shipping bolts and remove the saw from the protective plywood shipping base. For your convenience this scroll saw Is shipped from the factory partially assembled and requires only minimal assembly and setup before being put into service.

Before starting the assembly, make sure that the switch Is In the "OFF" position and that the power cord is unplugged. Do not plug In or turn on the scroll saw until you have completed the assembly and Installation steps described In this section of the manual.

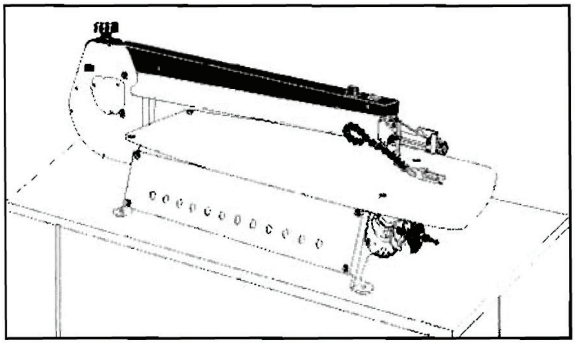

The unit should be Installed on a flat, sturdy and stable surface able to support the weight of the machine and the workpiece with ease.

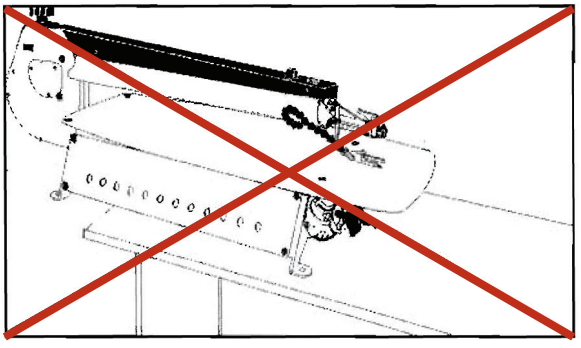

Never install the machine over the edge of a table or workbench.

INSTALLATION & ASSEMBLY

Saw guard assembly

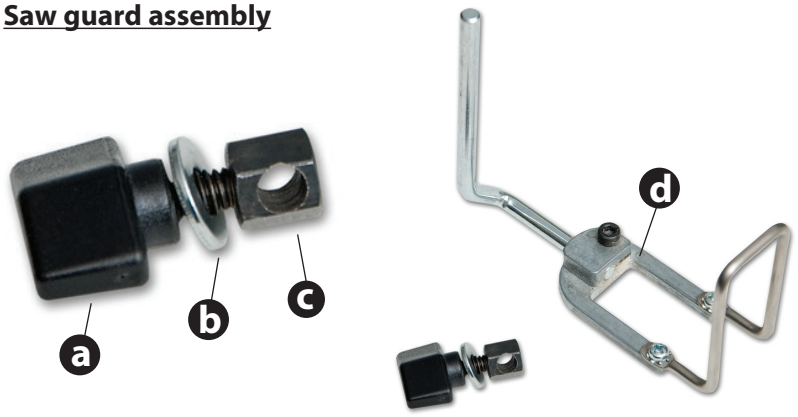

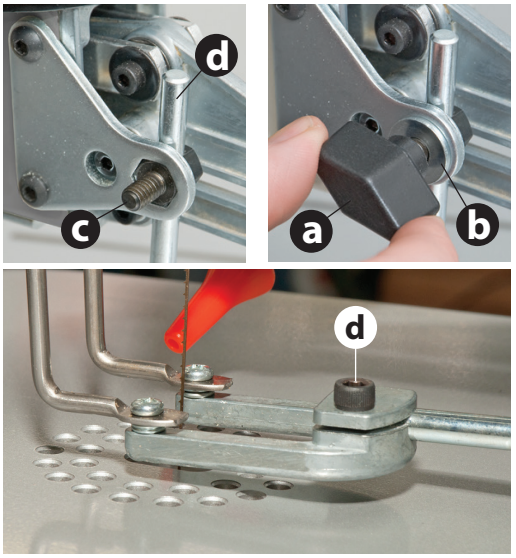

Saw guard assembly **(d)** assembled

Slot the guard clamping arm **(d)** through the pre-drilled hole in the hexagon clamp **(c)**. Insert the hexagon clamp **(c)** into the brackets hexagon recess, place the washer **(b)** over the hexagon clamp thread and secure using the butterfly clamping knob **(a)**.

NOTE: DO NOT OVERTIGHTEN otherwise you may strip the thread

Mounting to Work Surface

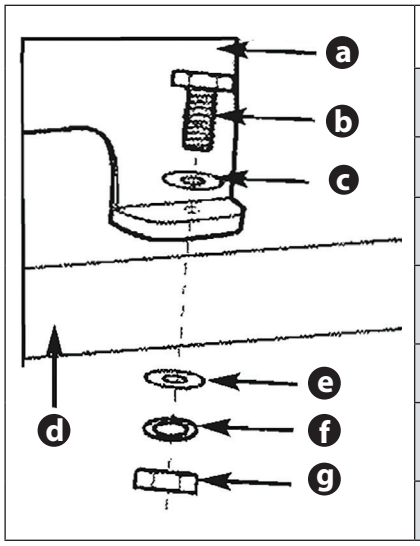

Asembly	
a	Saw
b	Hex Bolt
c	Flat Washer
d	Workbench or Stand
e	Flat Washer
f	Locking Washer
g	Hex Nut

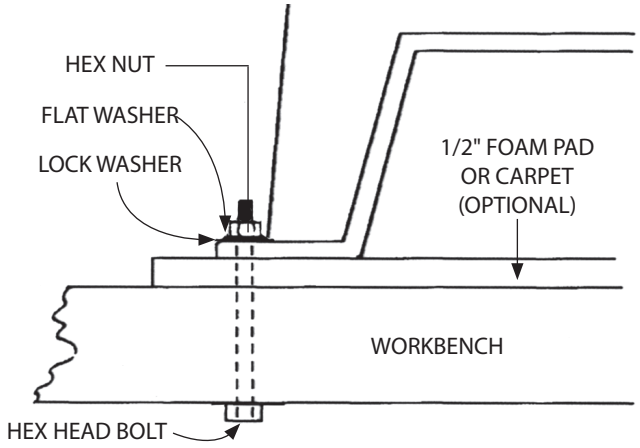

It is strongly recommended that you mount the machine to a workbench or to a purpose built stand, a pad between the scroll saw and the workbench/stand is also recommended to reduce vibration.

Drill four 8mm holes in your workbench/stand and secure using nuts bolts washers (Not Included).

NVR Switch assembly

A power NVR switch has been attached to isolate the scroll saw while not in use, see fig A.

• Press the 'GREEN' button to put power to the scroll saw then press the 'ON' button (B) to start the saw.

• Once operation has be completed, press the 'RED' button to isolate the scroll saws power.

NOTE: MAKE SURE THE SPEED CONTROL DIAL (C) IS SET TO LOW BEFORE YOU START UP THE SAW!

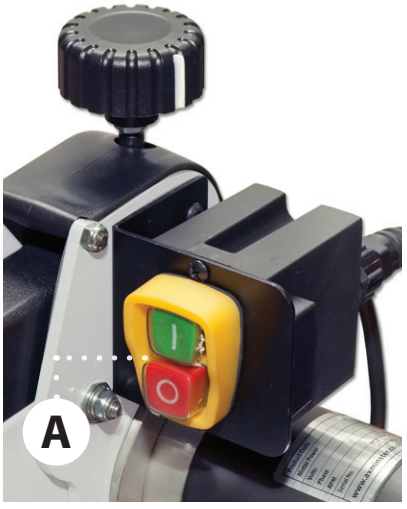

CHOOSING & INSTALLING A SAW BLADE

Blade Selection

Blade selection Is dependent on the type and thickness of the material being cut, but Is also a matter of experience and personal preference. There are numerous types of blades available on the market specifically suited for various cutting applications such as metal-cuffing and spiral blades which cut In all directions. Try test-cutting with a sample of each to determine which blade works best for you with different materials. Replacement blades can be purchased from a variety of sources. Ask your local tool or scroll saw dealer for suggestions for **unpinned 5" scroll saw blades** based on what is available In your area.

Some general guidelines to consider when choosing blades:

- Wide, thick blades with coarse teeth are suited to cutting straight lines and sweeping curves, but will not turn tight corners. They will cut aggressively and leave a fairly smooth finish, but may leave burn marks If the work piece is turned too tightly.

- Narrower, thinner blades with finer teeth will cut more slowly, but will turn much tighter corners for cutting very intricate work. They will Impart a very smooth, burnished finish that requires no sanding.

- Consider material thickness when selecting blades. Ensure that a minimum of two or three teeth are In contact with the workplace at all times. For example, when cutting 1 /8" thick material, use a blade with a minimum of 16-20 teeth per Inch.

SKIP TOOTH

Regular evenly spaced tooth pattern. Considered the most common of scroll saw blades, they are available In the widest range of sizes and provide a good combination of fast cutting action with good chip clearance and a relatively smooth finish.

BLADE	WIDTH	THICKNESS	TEETH/INCH	
#2/0	.022	.010	28	or extremely Intricate sawing. Very tight cuts In 1/16"-1 / 4" wood veneer, plastic, hard rubber, pearl, etc.
#0	.024	.011	25	
#2	.029	.012	20	For tight radius work with thin materials, 3/32" - 1/2" wood veneer, wood, bone, fibre, plastic, etc.
#4	.035	.015	15	
#5	.038	.016	12.5	For close radius work In materials 1 /8" or thicker. Good ,or sowing hard and soft woods, bone, horn, plastic, etc.
#6	.041	.016	12.5	
#7	.045	.017	11.5	Popular sizes for cutting hard and soft woods, 3/16" up to 2" Also cuts plastic, paper, felt, bone, etc.
#9	.053	.018	11.5	
#11	.059	.019	9.5	
#12	.062	.024	9.5	

REVERSE TOOTH

Reverse teeth at the bottom of the blades prevent splintering to the underside of the workpiece.

BLADE	WIDTH	THICKNESS	TEETH/ INCH	
#2/OR	.026	.011	28/20	Some as Skip Tooth blades.
#2R	.029	.012	20/13	
#5R	.038	.016	12.5/9	
#7R	.049	.018	11.5/8	
#9R	.054	.019	11.5/8	
#12R	.062	.062	9.5/6	

DOUBLE TOOTH

Fast, clean cutting and very efficient chip clearance.

BLADE	WIDTH	THICKNESS	TEETH/ INCH	
#1D	.026	.013	30	Some as Skip Tooth blades.
#3D	.032	.014	23	
#5D	.038	.016	16	
#7D	.044	.018	13	
#9D	.053	.018	11	
#12D	.061	.022	10	

There are 12 sockets (mounting holes) on either side of the base of the saw to hold blade storage "test tubes" (tubes not supplied). Most blade retailers sell blades either already in the tubes or will be able to sell spare tubes separately. Storing your spare blades in tubes, by size, right on the base of the machine con be a great way to organize your spore blades so that they are handy and available when needed.

Installing or Changing Blades

Always turn off and unplug the machine before removing, handling or changing blades.

1. Remove an Installed, worn or broken blade by flipping the blade tension lever forward (position **(1)**, then loosening the thumbscrews **(a)** and **(b)**, on the upper and lower blade mounts **(c)** and **(d)** (See Fig. 1 to 3).

2. Raise the upper arm and remove the blade.

NOTE: If the upper arm is fixed in position, turn to page 15 to adjust the arm tension!

3. With the blade teeth facing forward, slip one end of the blade through the hole In the table and fit each end of the blade Into the corresponding upper and lower blade mounts, then tighten the thumbscrews firmly by hand only - do not use tools. Note: Over tightening the blade clamp tumb screws can cause premature wear to the blades gripping surface and result in blade slippage.

4. Push the blade tension lever back (position **(2)** to apply tension on the blade.

Helpful Hints on blade tension: Determining correct blade tension Is somewhat subjective. It is learned through experience and is somewhat dependant on personal preference. A properly tensioned blade will last longer and be much less likely to break prematurely. If the blade tension Is too loose, you will notice that the blade will have a tendency to drift or slip off-line when cutting and you may also experience excessive vibration or unusual noise. A blade that is too tight will break prematurely.

On/Off Switch

A simple, dust protected rocker style on/off switch **(a)** is located on the top of the saw. (See Fig. 4)

Adjusting the blade speed

The Scroll Saw Is equipped with a variable blade speed control which allows you to select or fine-tune to the exact blade speed required (from 400-1550 strokes per minute) for best results based on the type and thickness of material and type of blade being used.
The blade speed control knob **(b)** , Is located on the top of the machine. (See Fig. 5)

- To increase blade speed, turn the control knob clockwise.
- To decrease blade speed turn the control knob counter clockwise.

Assuming the blade has been properly Installed In the blade mounts, when the blade tension lever Is pushed fully back towards the rear of the saw. The blade should be properly tensioned. Test the blade tension by lightly pulling on the blade, like you would a guitar string, with your finger. If the blade is tight and tensioned correctly you will get a clear and even note. If. so, you are ready to proceed to operating and cutting with the saw.

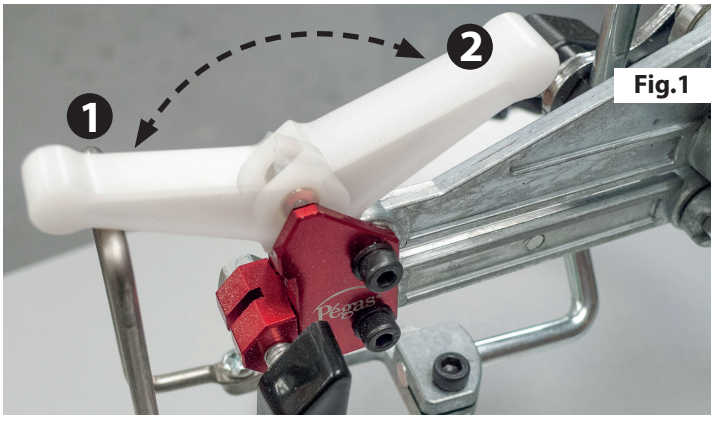

Fig.1

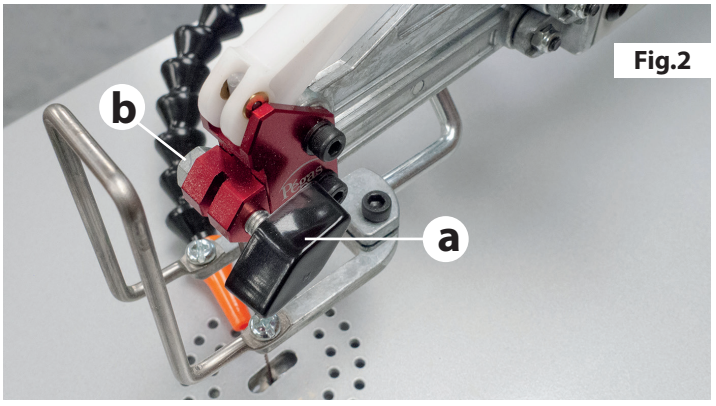

Fig.2

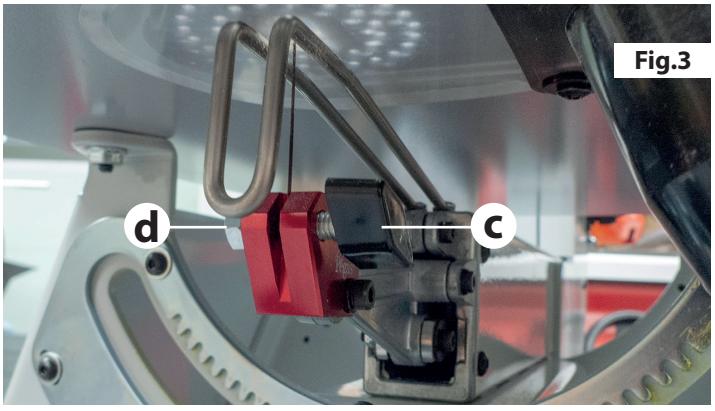

Fig.3

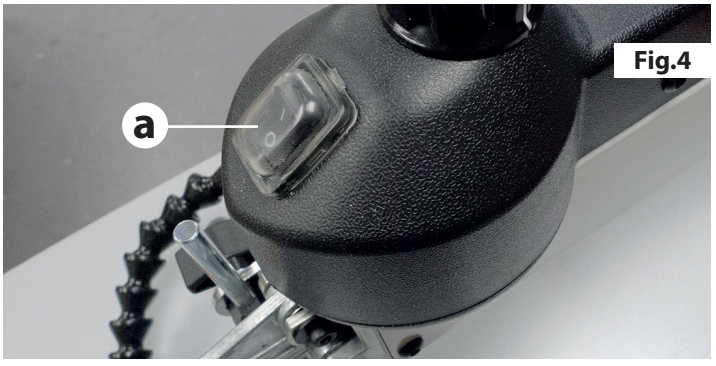

Fig.4

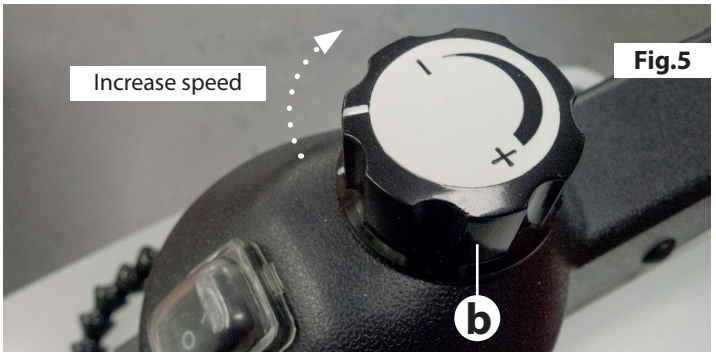

Fig.5

Blade speed selection Is subjective and Is dependant on a variety of factors: type and thickness of material being cut, type of blade being used, feed rate, required finish quality as well as experience, personal preference and comfort level of the user. There are no hard and fast rules. Be patient - practice and experience will be your best teacher. Here are some general guidelines to consider when selecting/adjusting blade speed:

- For best results and smoothest most efficient cutting, always select the highest blade speed that you are comfort able using based on your experience and skill level.
- Generally speaking, harder or denser workpiece material requires slower blade speeds.
- Slower speeds also work better when very thin blades, or when cutting most metals as well as for brittle or delicate material such as fine veneers.
- Some wood species will have a tendency to burn quicker at higher blade speeds. To avoid additional sanding later, reduce blade speed and feed speed at the first signs of burn marks on the workpiece.

Adjusting the Blower

The KC-16 KC-21 is equipped with a built-in blower to help clear cutting dust from the workpiece surface In front of the blade and on any reference lines. Adjust the blower tube **(a)** as needed to point the nozzle at the blade to set It at a comfortable distance so as not to obstruct your hand movement as you work. (See Fig. 6)

Workpiece Hold-Down

The workplace hold down **(b)** (See Fig. 6) can be adjusted to assist In preventing the blade from lifting the workpiece up from the table during the cut. Loosen the thumbscrew **(c)** to set the height to your convenience based on the thickness of the workplace. Before cutting, test to make sure that the hold-down Is not adjusted too tightly to the workplace or that It obstructs the movement of the workpiece.

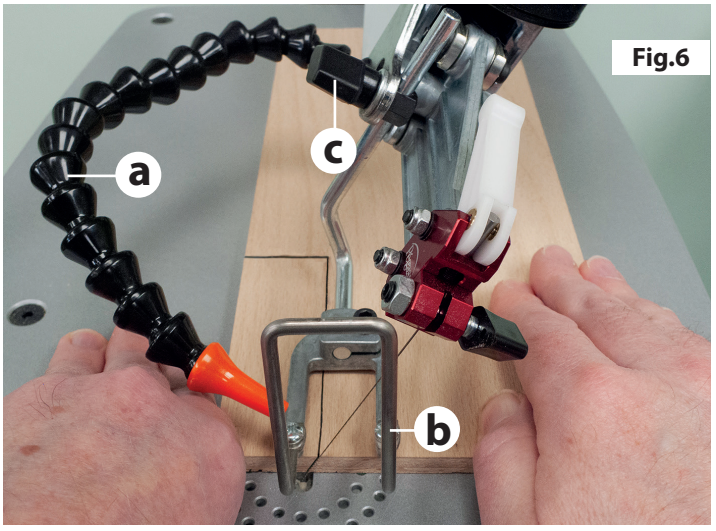

Fig.6

Adjusting the Osolation (Front to Back)

Fig A

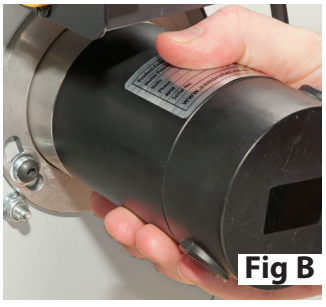
Fig B

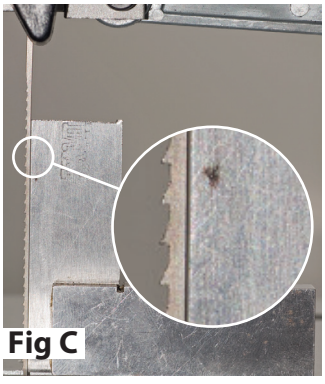
Fig C

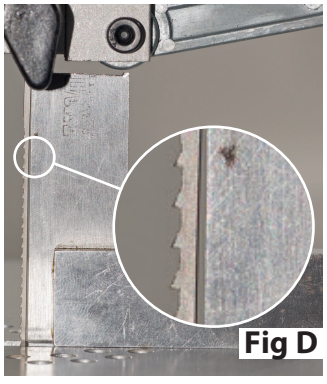
Fig D

Place a 90˚ square up against the blade, the blade movement can be set between course and fine for different cutting tasks, this can be adjusted by rotating the motor within its' mounts. Loosen the motor mounting cap head bolts, see figs A enough to be able to rotate the motor (this can be quite stiff to turn), start the machine and run at approximately 1/4 speed. By rotating the motor, see fig B and carefully observing the blade you will be able to see the blade changing its setting. The finest setting is where the blade moves vertically with the least amount of movement, see fig C backward and forwards horizontally. This should also be where the machine vibrates the least. When you have the setting where you wish it to be, tighten the motor mounting bolts.

Top & Bottom Blade holder Alignment

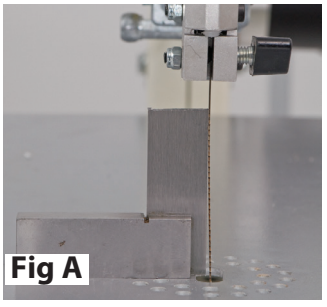
Fig A

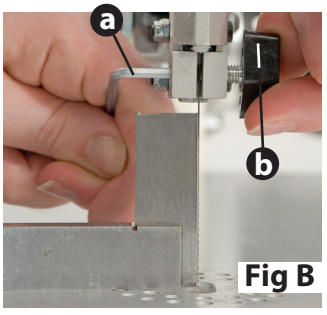

Fig B

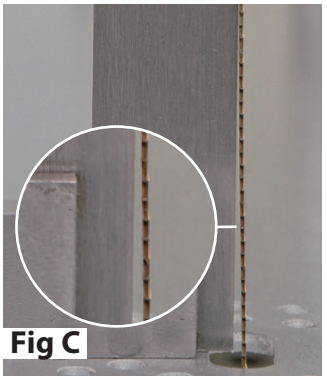
Fig C

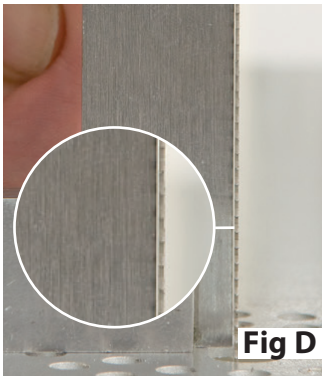
Fig D

If the blade is out of alignment please follow the procedures below for adjusting the top and bottom blade holders:

Place a 90˚ square up against the blade, see fig A. Using a 4mm Hex key **(a)** adjust the grub screw and butterfly nut **(b)**, see fig B, until the blade is parallel with the square. (See figs C and D).

Basic 90° Straight or Curved Cuts

All cuts made with the blade at 90° to the table follow the some basic principals. Start by marking or transferring your pattern or reference lines onto you workplace.

Note: The KC-16 has a 16" throat that allow tor a workpiece of up to 16" of clearance to swing completely around with out hitting the bock of the saw It necessary, rough-cut the workpiece down to a workable size before starting intricate work on the scroll saw. The above note applies also to the KC-21 (21") scroll saw.

1. With the saw turned off and unplugged, install the appropriate blade for the type of material to be cut and the type of cut to be made (Refer to the section "Choosing and in stalling a Saw Blade" on page 9).
2. Adjust the workplace hold-down and the blower nozzle to your liking.
3. Turn on the sow and set the speed controller to the desired blade speed.
4. With your fingers holding the piece firm to the table, and using your thumbs for directional control, (See Fig 7 & 8) feed the workplace Into the blade using steady, even pressure.
5. Make sure that the blade Is cutting on the waste side of your reference line and adjust feed direction sllghty as needed to compensate for blade drift.

Cutting Tips: To stay In control on tight curve cuts, slow down your feed rate as needed to allow the blade teeth time to make the cut. Avoid coming to a complete stop whenever possible as this can leave burn marks on the workpiece and also makes It more difficult o get the piece re-started and moving through the cut again. Avoid forcing through a curve cut as this can cause the blade to twist and cut off-track or may even cause the blade to break.

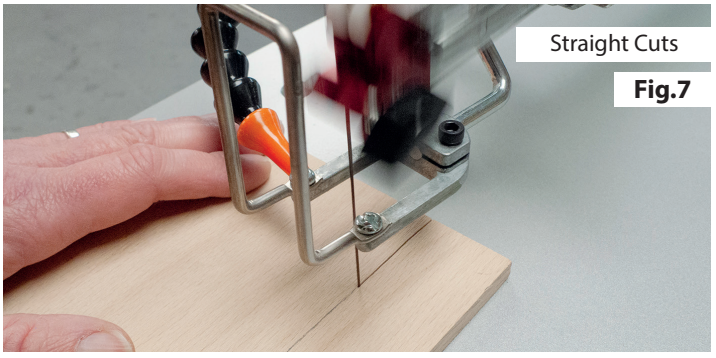

Fig.7

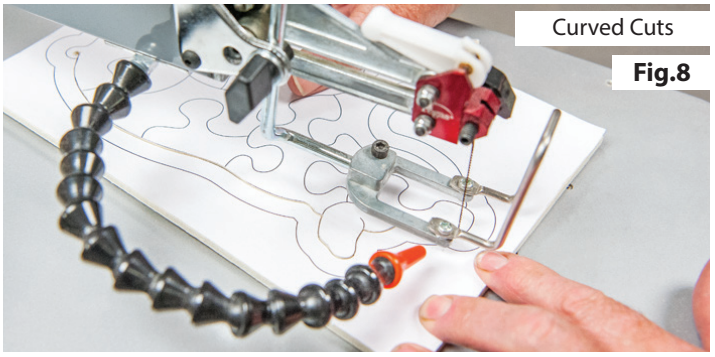

Fig.8

Fret Cutting

Fret or Inside cutting Is an operation that can only be performed on a scroll saw. Fret cutting Involves drilling a small guide or pilot hole through the Interior of your pattern on the workplace, then disconnecting one end of the blade which Is fitted through the guide hole and re-connected; essentially using this guide hole as the starting point to cut out the piece from within. A typical example of fret cutting would be removing the canter portion of lettering. (See Fig.9)

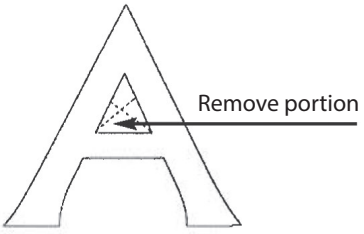

Fig.9

The **KC-16, KC-21** Is a great tool for fret cutting because, unlike most scroll saws It allows you to raise the upper arm with the blade attached, line up the guide hole In your workplace with the hole In the table and then lower the arm white guiding the blade through the hole from above (see step by step Instructions below). This can be a very useful time saving feature, particularly for Intricate or complex fret designs that can Involve dozens or even hundreds of holes.

Note: The upper arm locks in place in the raised position for easier insertion of the blade through the hole in the workpiece and for easier blade change.

1. With the saw turned off and unplugged, Install the appropriate blade for the type of material to be cut and the type of cut to be mode (Refer to the section "Choosing and Installing a Saw Blade" on page 9 of this manual).
2. With your pattern or design transferred onto the workplace, drill a guide hole In the Inside waste portion of the workpiece. (See Fig. 10) Make sure that the hole Is large enough for the blade to fit through.

Helpful hints on drilling guide holes: It multiple fret cuts are required on the same workpiece, drill all of your required guide holes before taking the workpiece to the scroll saw. This will keep you from going back and forth from the saw to the drill press.

To prolong blade life by limiting unnecessary cutting, drill your guide holes as close as possible to your reference lines. (See Fig. 11)

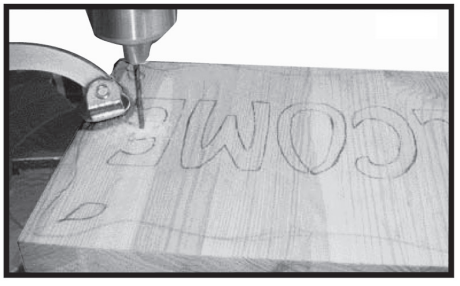

Fig.10

Fig.11

3. Release tension on the blade by flipping the blade tension lever forward.
4. Loosen the thumbscrew on the lower blade mount, located under the table, to release the blade from the mount.
5. Raise the upper arm assembly which will lift the blade up through the hole and above the table.
6. Position the workpiece on the table so that the guide hole lines up with the hole In the table.
7. Lower the arm assembly with one hand while guiding the blade through the hole In the workpiece and table.
8. Re-Install the bottom end of the blade In the lower blade mount and tighten the thumbscrew to secure the blade In the lower blade mount.
9. Flip back blade tension lever to re-tension the blade and test the blade tension as described In "Installing or Changing Blades· section of this manual.
10. To begin cutting follow the same steps as described In "Basic 90° straight or curved cuts• section on page 12 of this manual.

To reduce the risk of Injury, always turn off the s w and wait for the blade to come to a complete stop before reaching in to remove waste material from a fret cut.

Angle or Bevel Cutting

One of the unique features of the **KC-18 KC-21** Scroll Saw Is the ability to tilt the head of the saw In order to make angle or bevel cuts. The table and the workpiece always stay horizontal (parallel to the floor) while the blade tilts, keeping your hands in the same comfortable cutting position as they would normally be for regular right angle cuts. Because you are not fighting gravity or working with your hands or wrists bent In awkward positions, It con be a huge advantage and makes It easier and safer to make accurate bevel cuts.

The blade tilt controls ore located under the table at the front saw. (See Fig. 12)

To tilt the blade for bevel cutting:

1. Release the locking lever **(a)** by turning counter-clockwise.
2. Turn the tilting handle **(c)** left or right to set the blade to the desired angle.

Note: Push in and hold the spring loaded indexing pin (b) to locate the following common angles: 90˚, 45˚, 30˚ & 22.5˚ both left and right.

When tilting the blade to the left at extreme angles, it may be necessary to remove and reverse the lower blade mount thumbscrew (c) assembly in order to maximise clearance under the table. (Fig. 13 shows the lower blade mount in default position.

To avoid kinking or damaging the blade in the holder, when making adjustments make sure the set screw (d) (opposite the thumbscrew (e) is threaded in to the holder to protrude beyond the blade slot (f). (See Fig. 14 &15)

3. Tighten the locking lever **(a)** to secure the blade at the desired angle.
4. To begin cutting follow the same steps as described In "Basic 90° straight or curved cuts" section on page 11 of this manual. Fig. 16 shows the scroll saw In position for bevel cutting.

To reduce the risk of injury, always turn off the saw and wait for the blade yo come to a complete stop before reaching in to remove waste material.

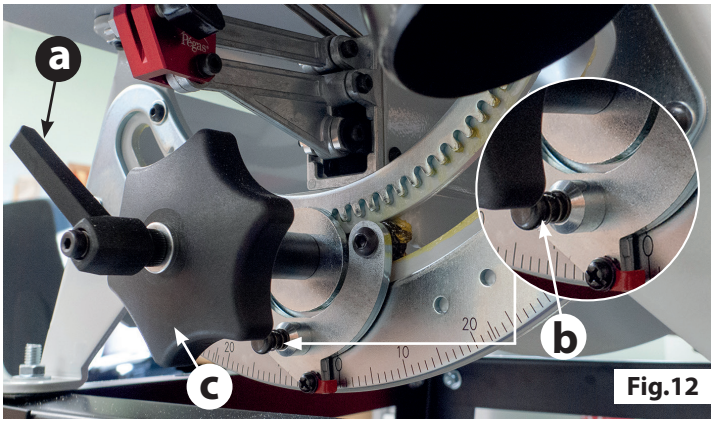

Fig.12

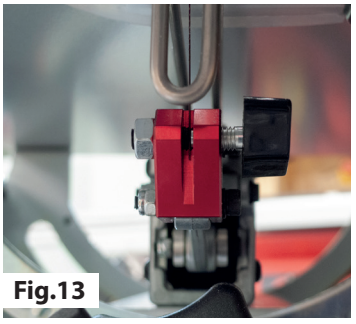
Fig.13

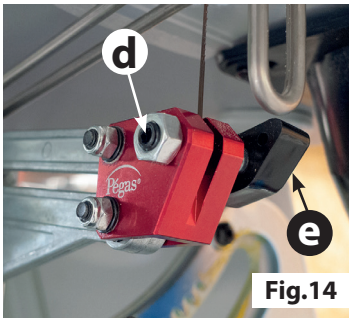

Fig.14

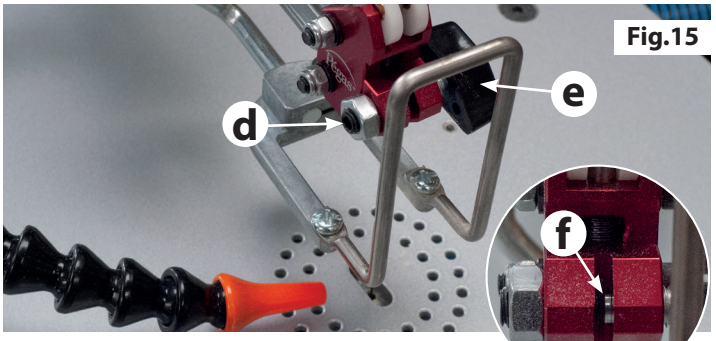

Fig.15

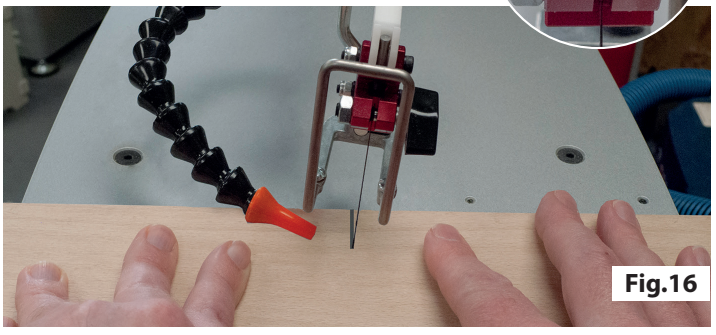
Fig.16

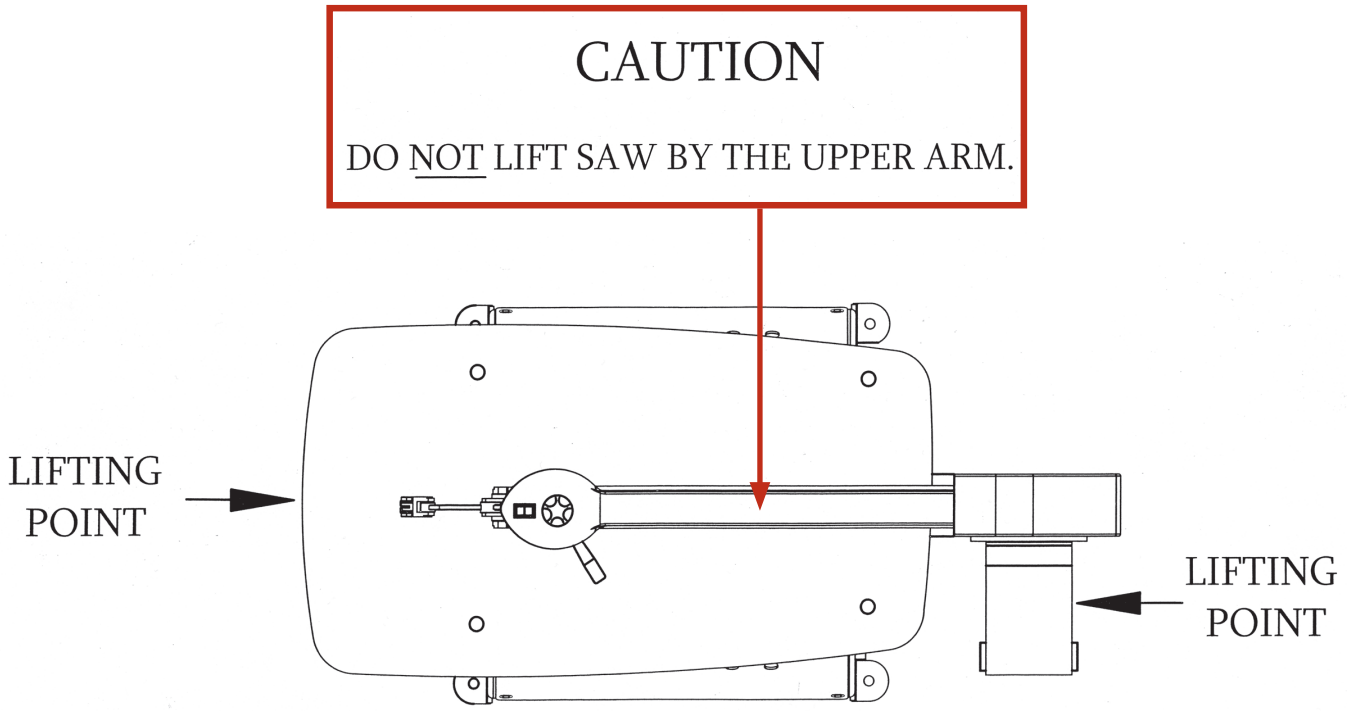

Maintenance

Always release tension on the blade when the saw Is not In use.

- Clean the saw regularly with a soft bristle brush or by vacuuming to keep cutting dust from accumulating.
- An occasional application of a light dab of grease on the front and rear trunnions (See Fig. 17) will keep the tilting mechanism working smoothly. If you find the tilting mechanism becoming more difficult to operate, thoroughly wipe off any built-up cutting dust on the trunnions and re-apply a little grease.
- The bearings in the drive mechanism are sealed and permanently lubricated and do not need to be oiled or greased.

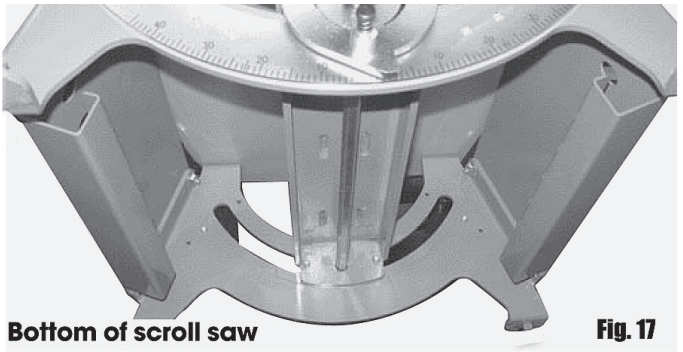
Bottom of scroll saw Fig. 17

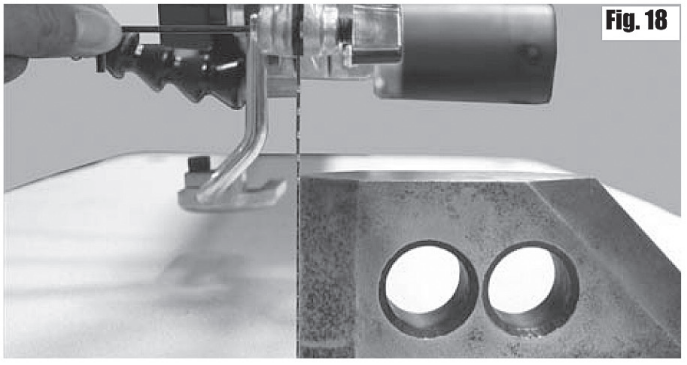
Fig. 18

Squaring the Blade to the Table

Depending on frequency of use and how much the tilting mechanism is used, normal wear will over time cause the blade to come slightly out of alignment with the table.
Periodically check the blade is square with the table. When needed, adjust as described in the following steps to re align the blade square to the table.

1. Turn off and unplug the saw.
2. Using the blade tilt controls at the front of the saw, set the blade angle to read O - which Is 90° vertical to the table.
3. Set a machinists square on the table and against the blade to verify the blade angle. (See Fig. 18)
4. If the blade angle requires adjustment loosen the 4 bolts In the front trunnion **(a)** well as the 4 bolts on the rear trunnions **(b)**.
5. By hand, move the entire head to bring the blade square to the table.
6. With the blade square to the table hold the head in position and re-tighten the bolts on the front and rear trunnions.

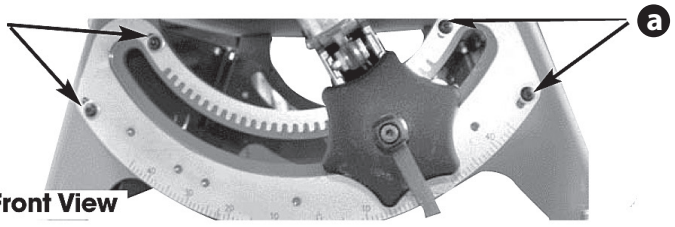

Front View

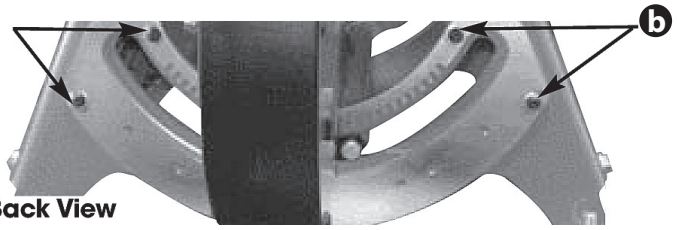

Back View

Upper Arm Tension Adjustment

Over time with normal wear the upper arm adjustment screw **(A)** may require slight adjustment in order to hold the arm in the raised position when the arm is lifted by the operator.

To rest the adjustment screw:

1. Remove the blade and with the upper arm down set the arm more or less parallel to the saw table.

2. Loosen the locking nut **(B)** with a 14mm spanner.

3. Turn the adjuster screw clockwise, 1/4 of a turn at a time until there is enough resistance to hold the arm in the raised position.

4. Re-tighten the lock nut **(B)** and check again to make sure the upper arm will now stay up when lifted. If not repeat these steps again, using 1/4 turn adjustments.

NOTE: DO NOT overtighten the adjustment screw! Over tightening the screw will apply to much tension and prevent the free movement of the arm during operations causing damage to your scroll saw over time.

NOTE: if the arm is fi ed in position with no movement turn the screw anti-clockwise, 1/4 of a turn at a time and check again.

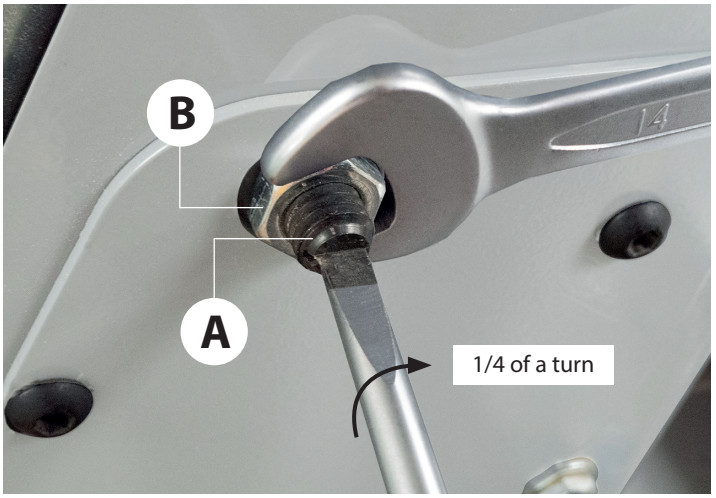

CHANGING THE FUSE

The scroll saws takes a 5 Amp 20 x 5mm glass fuse, follow the instructions below on how to change the fuse.

1. Unplug the scroll saw from the mains.

2. Unscrew the fuse cap to the rear of the scroll saw and remove the 5 AMP fuse.

3. Insert a new 5 AMP fuse into the end cap holder.

4. Re-insert the fuse assembly and lightly tighten.

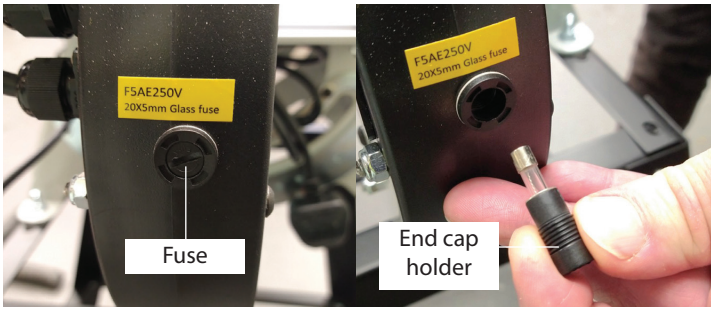

SPECIFICATIONS

Code	107653	107654
Model	AP406SS (KC-16)	AP535SS (KC-21)
Rating	Trade/Professional	Trade/Professional
Power	230V 50Hz 320W	230V 50Hz 320W
Throat	406 mm	535 mm
Stroke	18 mm	18 mm
Cuts per Minute	400 -1,400	400 -1,550
Max Depth of Cut	51 mm	51 mm
Noise Level dB (A)	67dB(A)	67dB(A)
Table Size	305 x 470 mm	345 x 597 mm
Arm Tilt	Left 35° Right -45°	Left 35° Right -45°
Overall L x W x H	686 x 380 x 432 mm	812 x 380 x 387 mm
Weight	24.5 kg	29.5 kg

STAND ASSEMBLY

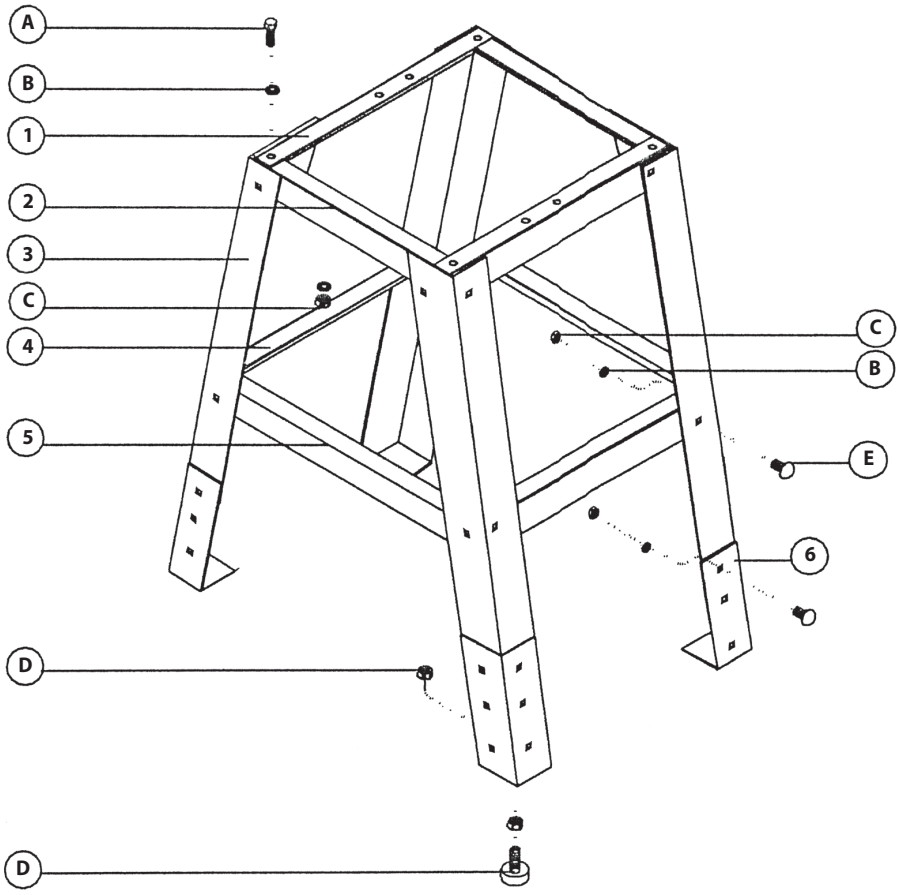

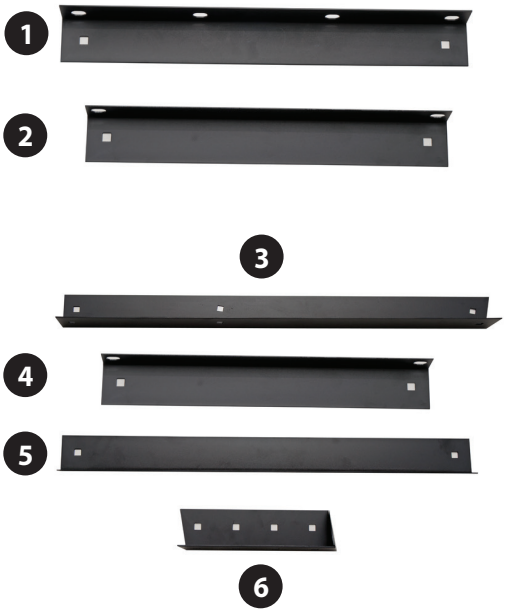

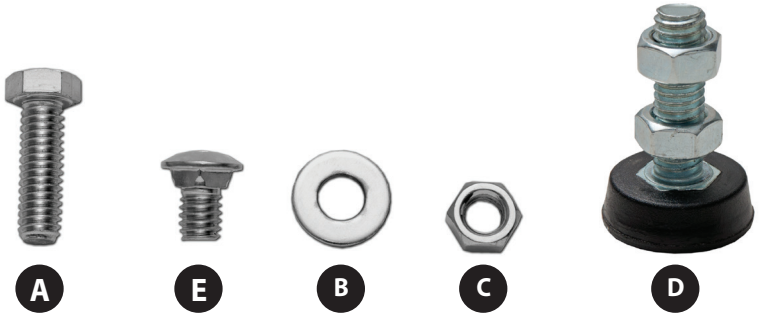

A	E	B	C	D
x4 M8 Bolts	x24 M8 Coach Bolts	x32 M8 Washers	x28 M8 Nuts	x4 Thread Rubber Foot

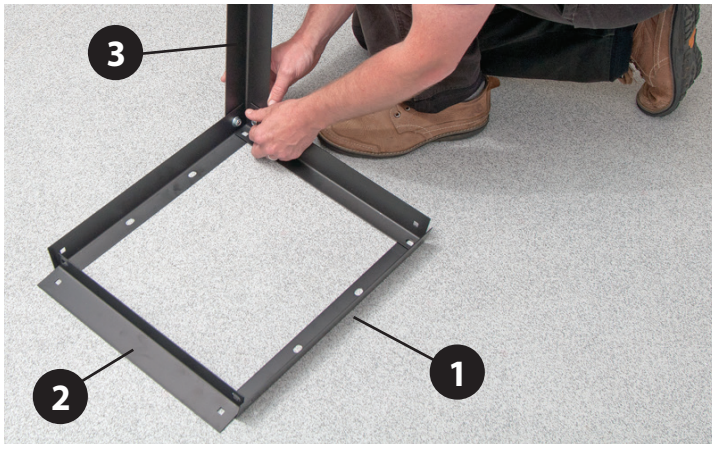

Step **1**

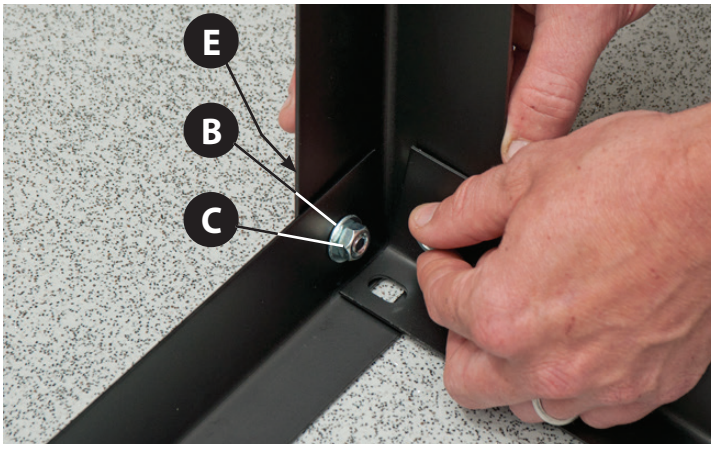

Step **2**

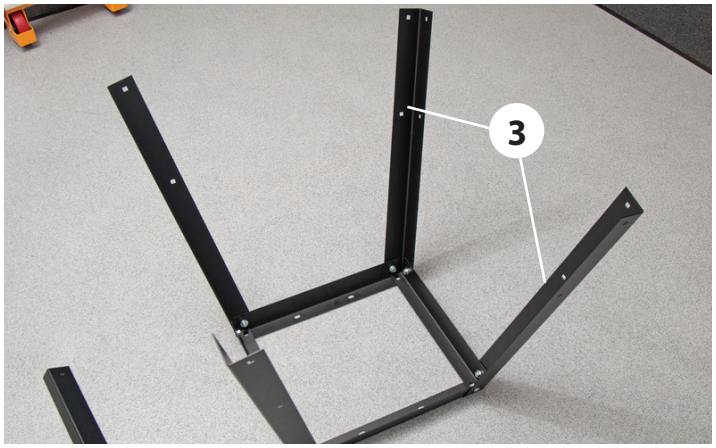

Step **3**

Step **4**

Step **5**

Step **6**

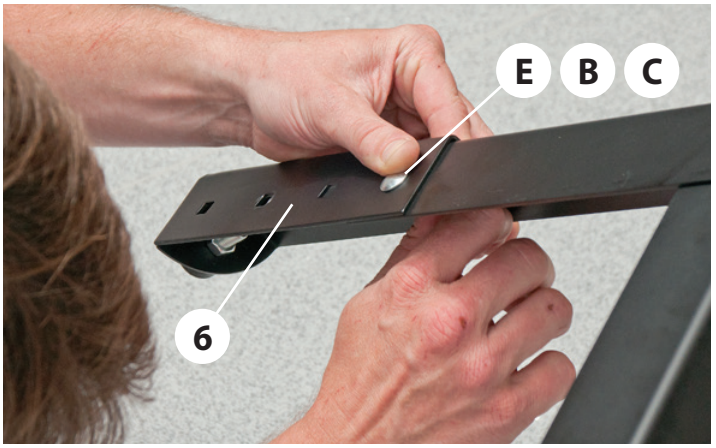

Step **7**

Use the holes in the bracket **(6)** to adjust the stand height

Stand assembled

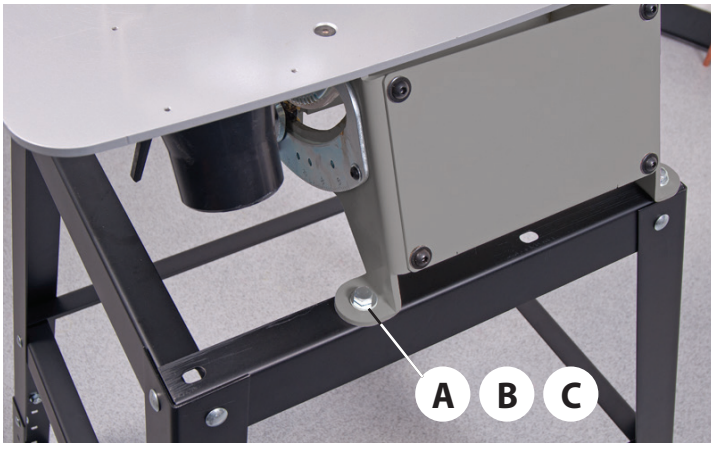

Lower the scroll saw on top of the stand and lineup the holes, secure using the four bolts **(A)** washers **(B)** and Nuts **(C)**

KC-16 - KC-21 - Diagram A

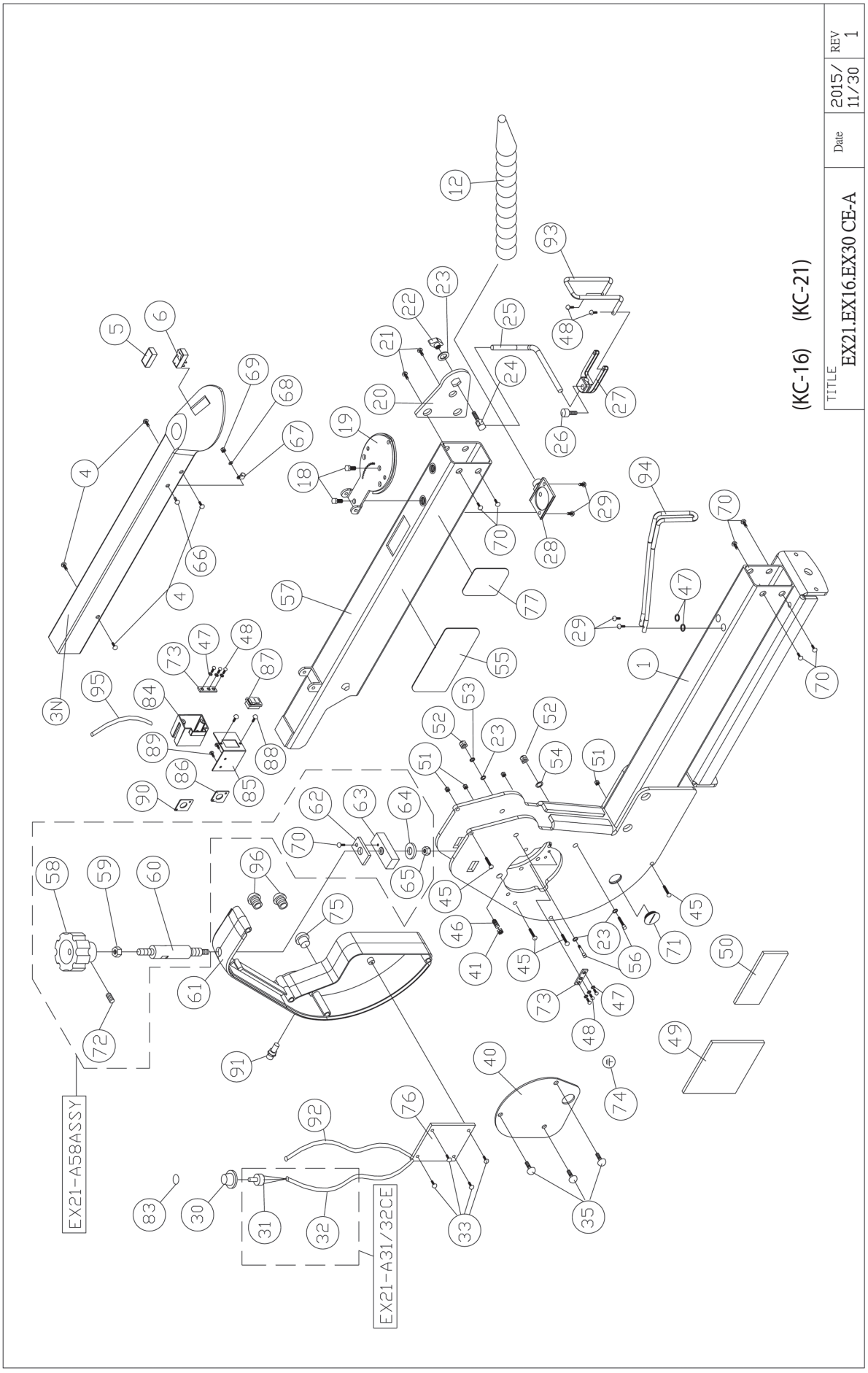

KC-16 - KC-21 - Diagram A

REF.	PART NO.	DESCRIPTION	SPECIFICATION	QTY
01	EX21-A01	Main Body		
	EX16-A78	Main Body		
	EX30-A01	Main Body		
03N	EX21-A03N	Top Cover		
	EX16-A79	Top Cover		
	EX30-A03	Top Cover		
04	EX21-A04	Allen Screw	#10-32x1/4	
05	EX21-A05	Switch Cover		
06	EX21-A06	Switch		
12	EX21-A12	Air Nozzle		
18	EX21-A18	BOLT	1/4-20x1/2	
19	EX21-A19	Upper & Lower Tension Plate		
20	EX21-A20	Hold Down Mount Plate		
21	EX21-A21	Allen Screw	#10-32x3/8	
22	EX21-A22	Hold Down Clamp Knob		
23	EX21-A23	Washer	1/4x16x1.8	
24	EX21-A24	Hold Down Clamp Screw		
25	EX21-A25	Hold Down Bar		
26	EX21-A26	Cap Screw	#10-32x1/2	
27	EX21-A27	Hold Down Forks		
28	EX21-A28	Dust Blower		
29	EX21-A29	Tap Screw	#8-32UNF3/8"	4
30	EX21-A30	VR Knob		
31	EX21-A31CE	VR		
32	EX21-A32CE	Control Cable		
	EX16-A81	Control Cable		
	EX30-A32CE	Control Cable		
	EX21-A31/32CE	VR-With control cable		
33	EX21-A33	Screw	M4x8	4
35	EX21-A35	Allen Screw	1/4-20x1/2	3
40	EX21-A40	Gear Cover		1
41	EX21-A41	Nut	3/8xT5. 5	1
45	EX21-A45	Allen Screw	#10-32x2-1/4	4
46	EX21-A46	Screw	3/8x5/8	1
47	EX21-A47	Washer	#8	8
48	EX21-A48	Screw	#8-32x1/4	8
49	EX21-A49	Motor Label		1
50	EX21-A50	Warning Label		1
51	EX21-A51	Nylon Nut	#10-32	4
52	EX21-A52	Nylon Nut	1/4-20UNC	2
53	EX21-A53	Lock Washer	1/4.	1
54	EX21-A54	Flat Washer	1/4. (0. D. 13)	1
55	EX21-A55	Label		2
56	EX21-A56	Screw	1/4*2-1/2	2
57	EX21-A57	Upper Arm		
	EX16-A80	Upper Arm		
	EX30-A57	Upper Arm		
58	EX21-A58	Knob		
	EX21-A58ASSY	Upper arm rising knob assembly		
59	EX21-A59	Nut	M8	
60	EX21-A60	Adjusting lever		
61	EX21-A61	Control Box		
62	EX21-A62	Cross Block Retainer		
63	EX21-A63	Housing Cross Block		
64	EX21-A64	Flat Washer	M6x16x2	
65	EX21-A65	Nylon Nut	M6	
66	EX21-A66	Allen Screw	#10-32x1/2	
67	EX21-A67	R Fastener	ACC2	
68	EX21-A68	Washer	#10	
69	EX21-A69	Nylon Nut	#10-32	
70	EX21-A70	Allen Screw	#10-32x5/16	
71	EX21-A71	Button		
72	EX21-A72	Set Screw	M4x5	
73	EX21-A73	Ground Plate		
74	EX21-A74	Ground Label		
75	EX21-A75	Strain Relief	PG11	
76	EX21-A76	Motor Control Set		
	EX16-A82	Motor Control Set		
	EX30-A76	Motor Control Set		
77	EX21-A77	Label		
83	EX21-A83	Label		
84	EX21-A84	Switch Box		
85	EX21-A85	Control plate		
86	EX21-A86	Fixing plate		
87	EX21-A87	Switch		
88	EX21-A88	Round Head Screw	#10-24UNCx3/4"	
89	EX21-A89	Round Head Screw	#10-24UNCx5/8"	
90	EX21-A90	Fixing plate		
91	EX21-A91	Fuse Holder		
92	EX21-A92	Power Cord		
93	EX21-A93	Protection brack-et-Up		
94	EX21-A94	Protection brack-et-Down		
95	EX21-A95	Short power cord		
96	EX21-A96	Strain relief	PG9	2

KC-16 - KC-21 - Diagram B

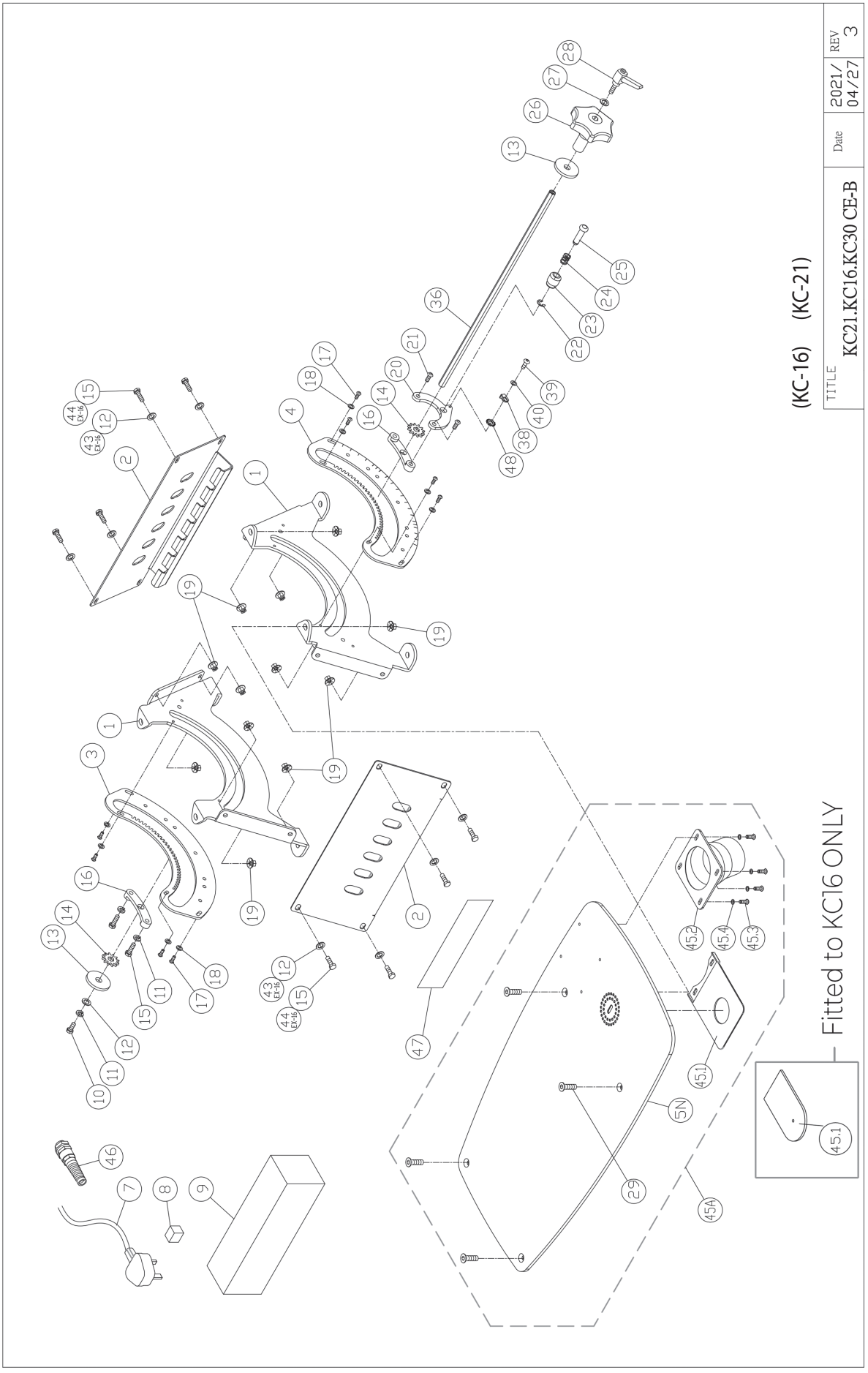

KC-16 - KC-21 - Diagram B

REF.	PART NO.	DESCRIPTION	SPECIFICATION	Q'TY
01	KC21-B01	Trunnion		2
02	KC21-B02	Side Panel		2
	KC16-B41	Side Panel		2
	KC30-B02	Side Panel		2
03	KC21-B03	Rear Trunnion Plate		1
04	KC21-B04	Front Trunnion Plate		1
05N	KC21-B05N	Table		1
	KC16-B42	Table		1
	KC30-B05N	Table		1
07	KC21-B07	Power Cord		1
08	KC21-B08	Spong Block		1
09	KC21-B09	Polyfoam		1
10	KC21-B10	Screw	1/4"-20UNC* 1/2"	1
11	KC21-B11	Lock Washer	1/4"	3
12	KC21-B12	Washer	1/4"	9
	KC16-B43	Washer	1/4" Black	8
13	KC21-B13	Blade Tilt Washer		2
14	KC21-B14	Blade Tilt Drive Gear		2
15	KC21-B15	Screw	1/4-20UNC*3/4"	10
	KC16-B44	Allen Screw	1/4-20UNC*3/4"	8
16	KC21-B16	Angle Follower		2
17	KC21-B17	Screw	#10-32x5/16"	8
18	KC21-B18	Washer	#10x12x1	8
19	KC21-B19	Nut	1/4"-20UNC	12
20	KC21-B20	Angle Indicator		1
21	KC21-B21	Allen Screw	1/4"-20x1"	2
22	KC21-B22	E Ring	ETW-3	1

23	KC21-B23	Tilt Detent Barrel		1
24	KC21-B24	Spring		1
25	KC21-B25	Detent Plunger		1
26	KC21-B26	Tilt Handle		1
27	KC21-B27	Washer	1/4"x16X3	1
28	KC21-B28	Blade Tilt Locking Lever		1
29	KC21-B29	Flat Head Screw	1/4"-20x3/4	4
36	KC21-B36	Tilt Lock Draw Rod		1
	KC16-B45	Tilt Lock Draw Rod		1
	KC30-B36	Tilt Lock Draw Rod		1
38	KC21-B38	Pointer		1
39	KC21-B39	Round Head Screw	M4x6mm	1
40	KC21-B40	Washer	M4	1
45A	KC21-B45A	Dust collector table kit		
	KC16-B45A	Dust collector table kit		
	KC30-B45A	Dust collector table kit		
45.1	KC21-B45.1	Plastic shroud Plate		1
	KC16-B45.1	Clear PVC Plate		1
45.2	KC21-B45.2	Dust chute		1
45.3	KC21-B45.3	Round Head Screw	#8-32unc-3/8"	4
45.4	KC21-B45.4	Washer	#8-32unc	4
46	KC21-B46	Strain relief	210-7010-M16-10	1
47	KC21-B47	Warning Label		1
48	KC21-B48	External Tooth Washer	M4	1

KC-16 - KC-21 - Diagram C

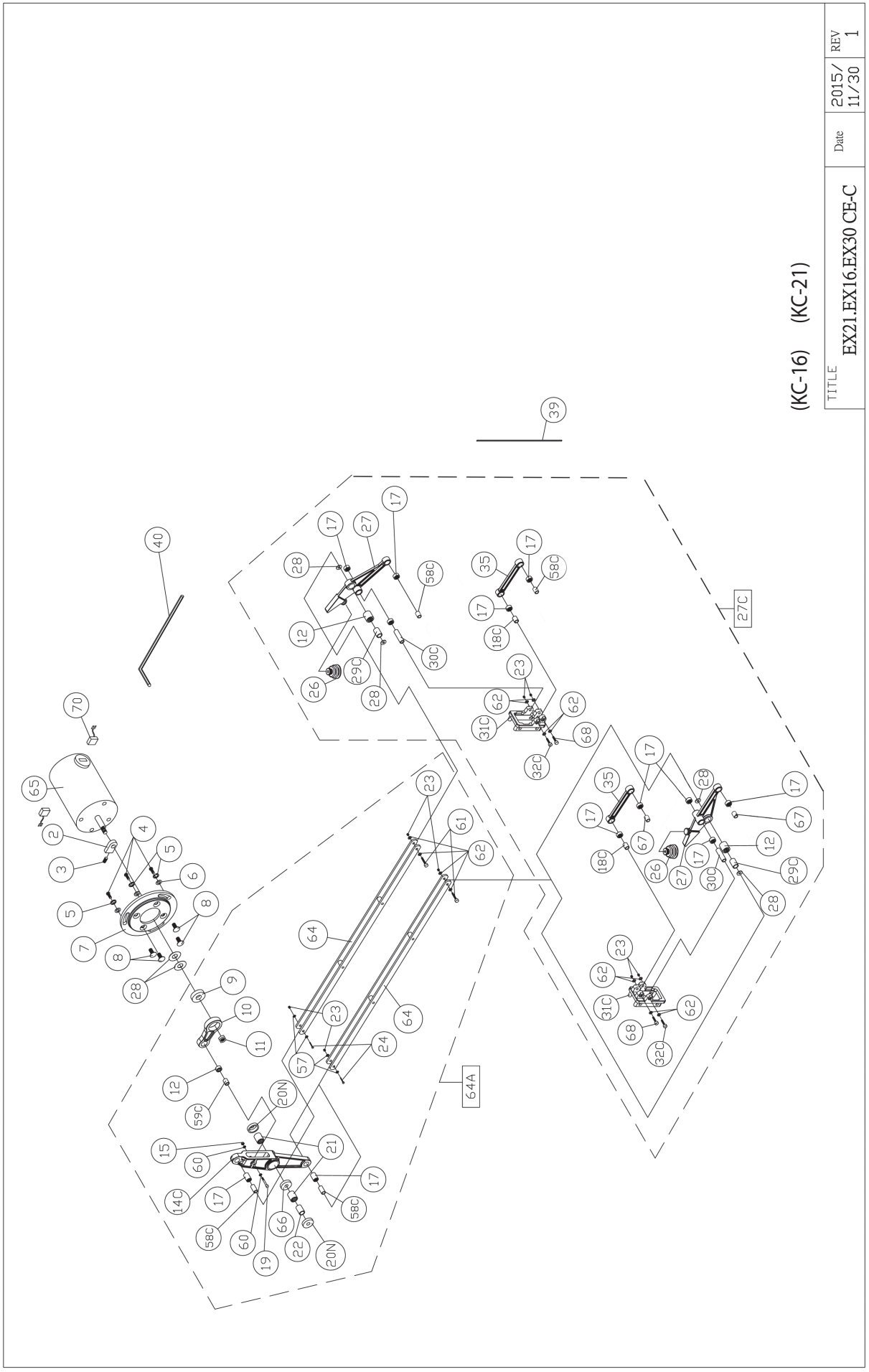

KC-16 - KC-21 - Diagram C

REF.	PART NO.	DESCRIPTION	SPECIFICATION	QTY
02	EX21-C02	Balance Block		1
03	EX21-C03	Set Screw	M6*6	I
04	EX21-C04	Allen Screw	1/4-20x1/2	3
05	EX21-C05	Lock Washer	1/4.	3
06	EX21-C06	Flat Washer	1/4x16x1.8	3
07	EX21-C07	Motor Cover Plate		1
08	EX21-C08	Screw	M6x16	4
09	EX21-C09	Bearing	608ZZ	1
10	EX21-C10	Motor Cam		1
11	EX21-C11	Nut	M8XP1.25 LH	1
12	EX21-C12	Bearing	810	3
14C	EX21-C14C	Rocker Cam		1
15	EX21-C15	Lock Nut	M5	1
17	EX21-C17	Bearing	0609	12
18C	EX21-C18C	Inner Bearing Sleeve (Short)	6.03x21	2
19	EX21-C19	Cap Screw	M5*28	1
20N	EX21-C20N	Bearing Cover		2
21	EX21-C21	Bearing	1412	2
22	EX21-C22	Main Rocker Pivot	14. 04x35. 5	1
23	EX21-C23	Nut	M4	12
24	EX21-C24	Cap Screw	M4*25	2
26	EX21-C26	Air Pump Bellows		2
27	EX21-C27	Front Rocker		2
27C	EX21-C27C	Upper and Lower rocker assembly (EX16-C27C)		
	EX30-C27C	Upper and Lower rocker assembly		
28	EX21-C28	Washer	M8*15*0.6	6
29C	EX21-C29C	Inner Bearing Sleeve-Front Rocker	8. 03x18. 40mm	2
30C	EX21-C30C	Bearing Inner Sleeve (Long)	6.03x37mm	2
31C	EX21-C31C	Rocker Mount		2
32C	EX21-C32C	Cap Screw	M4*45	2
35	EX21-C35	Strut		2
39	EX21-C39	Blade		
40	EX21-C40	Allen Key	3MM	
57	EX21-C57	Washer	M4x10x1	4
58C	EX21-C58C	Inner Bearing Sleeve (Long)	6.02 x 16.5mm	4
59C	EX21-C59C	Bearing Inner Sleeve	8.03 x 21.5mm	1
60	EX21-C60	Washer	M5	2
61	EX21-C61	Cap Screw	M4*27	2
62	EX21-C62	Washer	M4x14x1	12
64	EX21-C64	Drive link Assy		2
	EX16-C64	Drive link Assy		2
	EX30-C64	Drive link Assy		2
64A	EX21-C64A	Complete drive link Ass'y		
	EX16-C64A	Complete drive link Ass'y		
	EX30-C64A	Complete drive link Ass'y		
65	EX21-C65	Motor		1
66	EX21-C66	Washer		1
67	EX21-C67	Cylinder insert	6.03x16mm	2
68	EX21-C68	Cap Screw	M4x30	2
70	EX21-C70	Motor Brushes		2

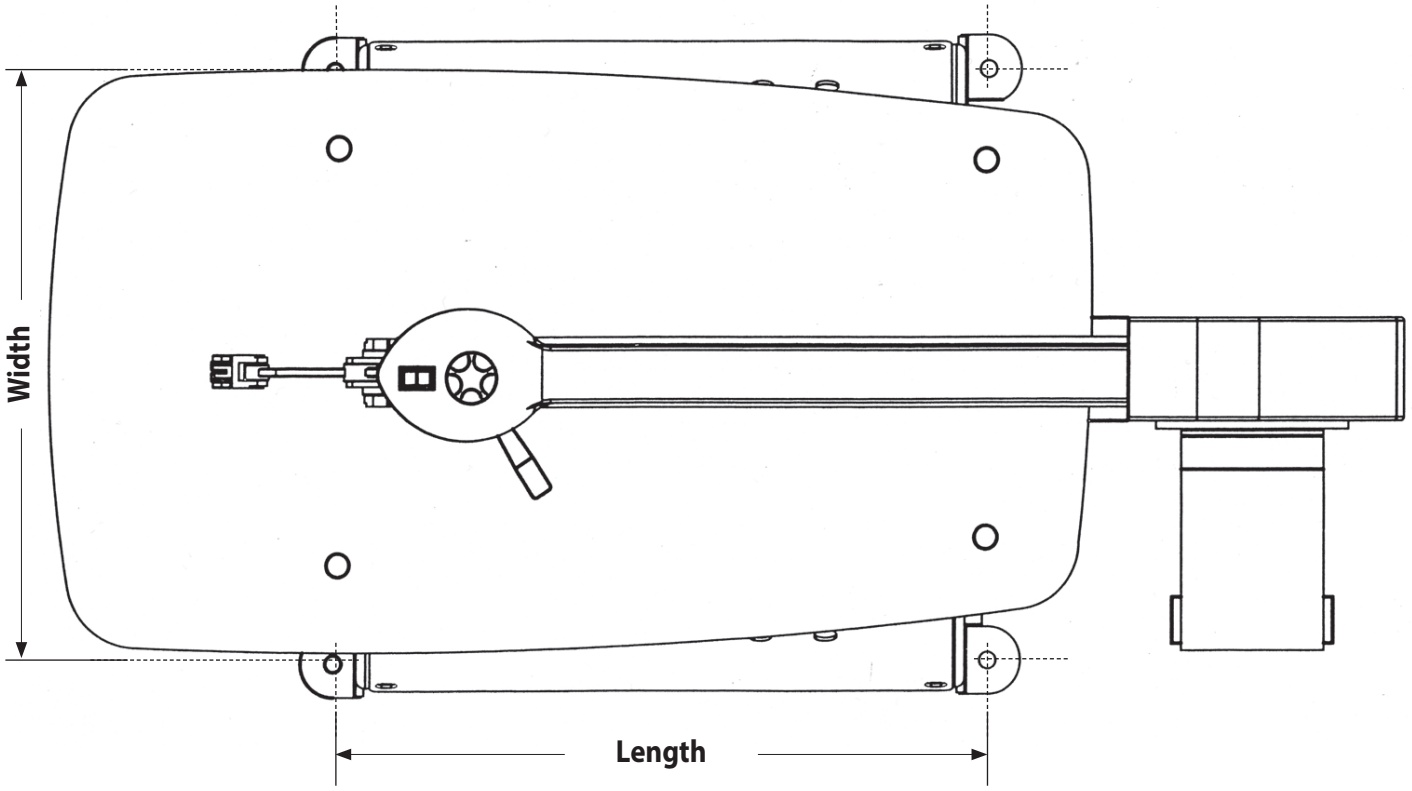

Base Hole Dimensions		
Model	**Length**	**Width**
AP406SS (KC-16)	262 mm	343 mm
AP535SS (KC-21)	385 mm	343 mm

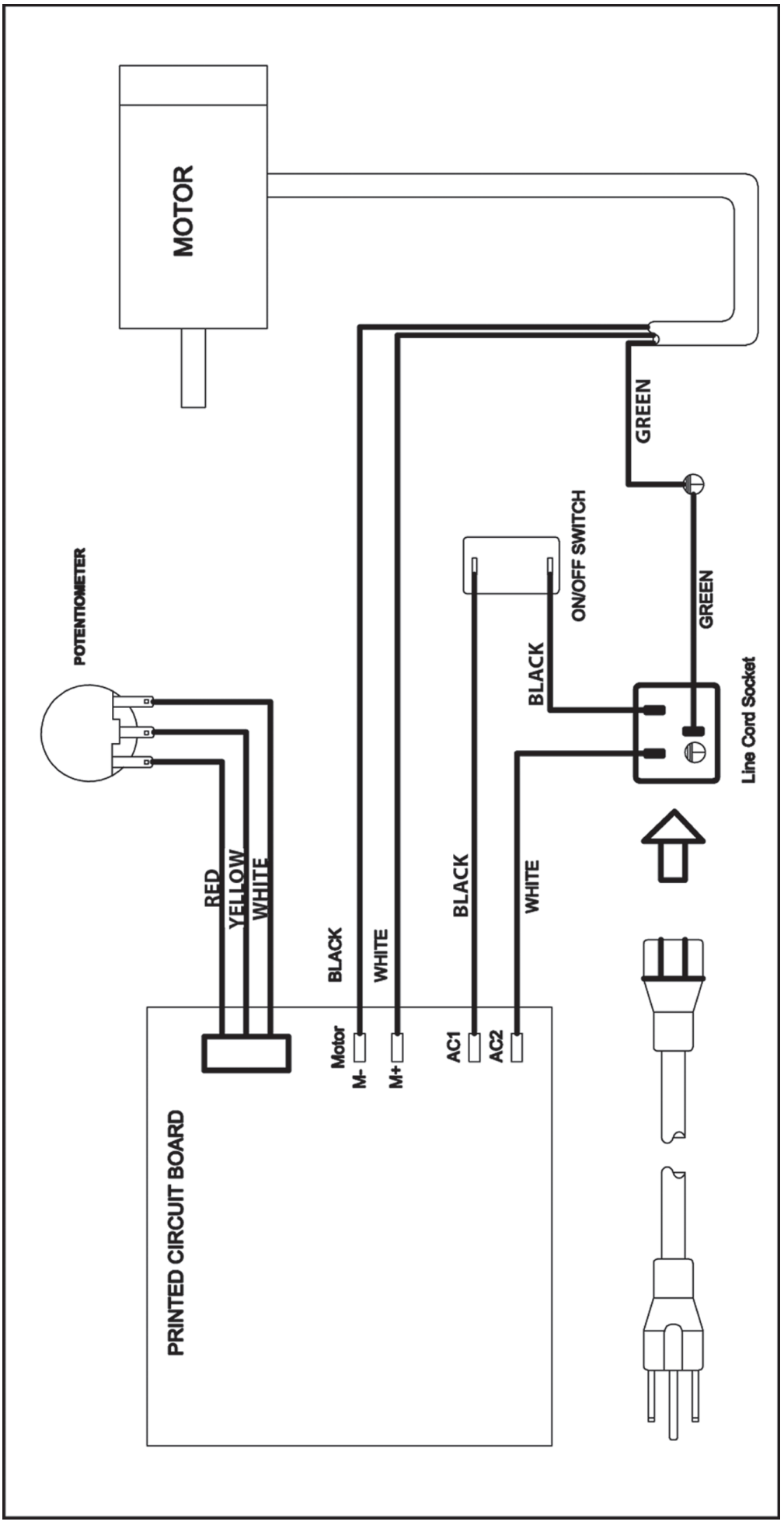
MOTOR
POTENTIOMETER
RED
YELLOW
WHITE
BLACK
WHITE
Motor
M-
M+
BLACK
WHITE
AC1
AC2
ON/OFF SWITCH
BLACK
GREEN
GREEN
Line Cord Socket
PRINTED CIRCUIT BOARD

The packaging is suitable for recycling.
Please dispose of it in a responsible manner.

EU Countries Only

Do not dispose of electric tools together with household waste material.
By law they must be collected and recycled separately.

Axminster Tools, Axminster Devon EX13 5PH
axminstertools.com