Owner Instructions

Warning!
Read instructions before using the machine

AXMINSTER®
POWER TOOL CENTRE

NV 750s
NVD 750s

Numatic INTERNATIONAL

www.numatic.com

750 Fitting the handle

1

2

3

4

NV 750

603917

603101

NV 750 - Side Inlet for Shavings and Chippings

Shavings and Chippings.

Using Blanking Cap attached to machine, to blank off centre inlet.

NV 750, 51mm

Fit the 51mm hose to the side inlet
Fit Stainless gulper to hose if required.

NV 750 - Centre Inlet for Normal Pick Up

Normal Pick Up.

Using Blanking Cap attached to machine, to blank off side inlet.

NV 750, 51mm

Fit the 51mm hose to the centre inlet.
Fit Stainless gulper to hose if required.

NVD 750

NVD 750 - 100mm Hose Attachment for Shavings and Chippings

Shavings and Chippings.
Using blanking cap attached to machine, to blank off centre inlet and remove 51mm reducer if fitted.

NVD 750, 100mm
Fit (613001) hose securely to make sure there is a good seal on to the side inlet.

NVD 750 - 32mm Hose Attachment for Normal Pick Up and Power Tools

Normal Pick Up and Power Tools.
Fit the yellow 32mm reducer and blanking cap to side entry and then fit the (601102) 32 mm hose to the centre inlet

(Circular saw show for demonstration purposes)

NVD 750, 32mm
Fit the (601176) 32mm reducer to the end of the hose and trim to fit your power tool.

NV 750 Blower Cap

Make sure the air diffuser is fitted to the rear of your machine.

NVD 750 Blower Cap

Remove blanking cap, before use and

Fit the air diffuser before using your machine.

Using your Machine

Make sure your machine is plugged into a suitable power supply.

Turn on your machine

NVD 750 only - Low Flow Indicator

The NVD appliance is fitted with a low flow indicator to show that air flow has reduced. In the event of the indicator light flashing, check the following:-

Cause	Solution
Blanking cap still fitted	Remove the cap.
Blocked hose	Unblock the hose.
Bag full	Remove and replace.
Cloth filter clogged	Remove and clean.

Cleaning the Machine.

Undo the toggle clamps and remove the head

Remove the Filter

NV 750

NVD 750

Removing the Filter bag - Side inlet - Chipping and Shavings

Undo the locking toggle to remove the drum from the frame for emptying.

Remove the used filter bag and empty the contents into a suitable waste bag, dispose of in an environmentally - friendly manner.

Fitting the Filter bag - Side inlet - Chipping and Shavings

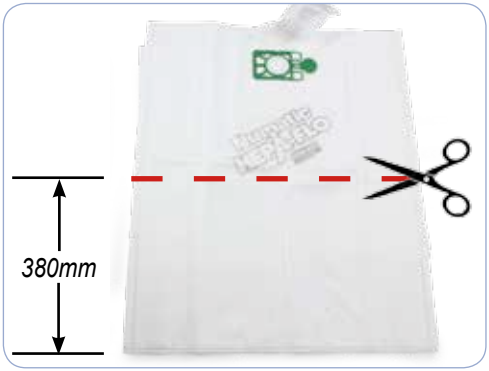

Shavings and Chippings.
Cut 4BH filter bag.

Place the cut bag into the drum, refit the cloth filter and refit the machine head.

Removing the Filter bag - Centre inlet - Normal Pick Up and Power Tools

Remove the used filter bag and dispose of in an environmentally - friendly manner.

The drum should be empty as all the waste is collected in the 4BH filter bag.

Fitting the Filter bag - Centre inlet - Normal Pick Up and Power Tools

Normal Pick up and Power Tools

Fit the new 4BH filter bag over the inlet tube.

Refit cloth filter and refit machine head.

NV 750 - Single Motor Power

NVD 750 - Twin Motor Power.

Axminster Power Tools **-** Workshop utility vacuum

1

2

3

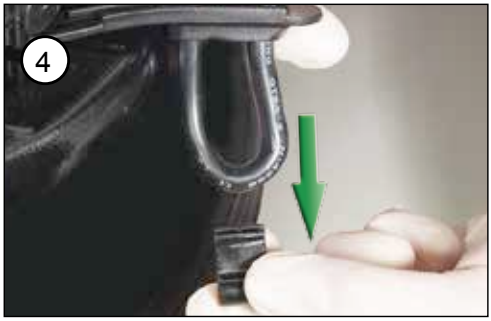
4

5

6

7

8

1. Voltage
2. Frequency
3. Rated Input Power
4. Weight (ready to work)
5. Company Name & Address
6. Model
7. Machine yr/wk Serial number
8. WEEE Logo
9. Protection Class
10. CE Mark

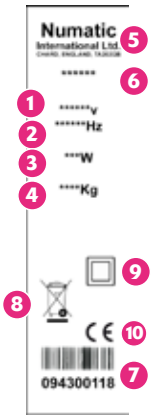

PPE (personal protective equipment) That may be required for certain operations.

Ear Protection | Safety Footwear | Head Protection | Safety Gloves | Eye Protection | Protective Clothing | Dust / Allergens Protection | Hi Vis Jacket

Caution Floor Sign

NOTE: A risk assessment should be conducted to determine which PPE should be worn.

Safety Critical Components

Mains leads:

(230V) NV 750	HO5VV-F	12.5 x 3 x 1.0 mm^2 (220950)
(230V) NVD 750	HO5VV-F	10 x 3 x 1.5 mm^2 (236011)
(110V)	HO5VV-F	12.5 x 3 x 2.5 mm^2 (220911)

WEEE Legislation
(Waste, Electrical and Electronic Equipment)
Vacuum cleaner, accessories and packaging should be sorted for environmentally - friendly recycling.
(Only for EU Countries)
Do not dispose of vacuum cleaner into household waste! According to the European Directive 2012/19/EU on waste electrical and electronic equipment and its incorporation into national law.
Vacuum cleaners that are no longer suitable for use must be separately collected and sent for recovery in an environmentally - friendly manner.

Failure to rectify the problem or in the event of a breakdown contact your Numatic dealer or the Numatic Technical helpline +44 (0)1460 269268.

Daily
Keep the machine clean, including hoses and tubes.
Ensure the bag and filter are fitted.
Regularly examine the power cord.
Check dust bag frequently.
Check filters are clean.
Weekly - as daily and:-
Check for any worn or damaged parts and replace immediately.
Do not steam clean or pressure wash.

Information for dry use vacuum cleaners

Warning!

Ensure you read the instruction manual before using the machine.
Operators shall be adequately instructed on the use of these machines, as with all electrical equipment, care and attention must be exercised at all times during use, you must also make certain that routine and preventative maintenance is carried out periodically to ensure safe operation.
Failure to carry out maintenance as necessary, including the replacement of parts to the correct standard could render this equipment unsafe and the manufacturer can accept no responsibility in this respect.
This machine is for *DRY USE* only
You must disconnect the machine from the mains by removing the plug from the supply socket *BEFORE* cleaning or maintenance and when replacing parts or converting the machine to another function.
This appliance is intended to be assembled, cleaned and maintained by an adult.
This machine is not suitable for the collection of biological hazards, hazardous or explosive dusts. Contact your local distributor if you require a machine capable of performing these tasks.
This machine is not a toy; children shall not play with this machine.
The machine must not to be used by persons with reduced physical, sensory or mental capabilities, or lack of experience or knowledge, unless they have been given supervision or instruction.
You must not allow the supply cord to come into contact with rotating brushes (if fitted).

Caution

This machine must not be stored outside, or used in wet environments, or to collect wet materials.
The vacuum cleaner should be stored in a dry place and is for indoor use only.

Notes

You must ensure that the filtration system fitted to the machine is suitable for the material being collected.
This product complies with the requirements of *IEC/EN 60335-2-69 2012*.
The primary use for this machine is commercial, for example in hotels, schools, hospitals, factories, shops and offices.
If the vacuum cleaner stops working, remove the plug from the wall before investigating where the fault lies.
If the vacuum cleaner has a blockage, switch off, remove the plug from the socket outlet, and inspect the floor tool, wands and hose for debris. If the floor tool, wands and hose are clear, replace the dust bag and clean the filter.
The vacuum cleaner should be inspected after use for damage.

Do

- Keep your machine clean.
- Keep filters clean.
- Use filter bags, they will enhance performance and help keep machine clean.
- Use a Numatic original filter bag under fine dust conditions.
- Keep hoses and tubes clear.
- Replace any worn or damaged parts immediately.
- Regularly examine the power cord. If damage is found such as cracking or aging the power cord must be replaced by a competent person using the correct Numatic original part.
- Change dust bag frequently.
- Keep diffuser filter (where fitted) clean.
- Only use the brushes provided with the machine. The use of other brushes may impair safety.

Don't

- Unreel the cable with one pull or pull on the cable to unplug the machine from the power supply.
- Use to suck up hot ashes or lighted cigarette ends.
- Use steam cleaners, pressure washers or immerse in water to clean the machine.
- Attempt machine maintenance or cleaning unless the power supply plug has been removed from the supply outlet.
- Use in a wet environment or to collect wet materials.
- Store your machine in wet conditions.

Data

Machine	Cleaning Range	Motor	Weight (Ready to work)	Sound Pressure
NV 750 NVD 750 110 Volt	32.8 m 26.8 m 32.8 m	1200W 2400W	16.8 kg 23.6 kg	66.0 dB (A) 77.1 dB (A) Uncertainty 0.2 dB
Drum Size	**Protection Class**		**Size**	
35L	Class I		740 x 450 x 400 mm	

Replacement parts

NV Filter	
604119	White Permatex Filter + grid
NVD Filter	
604137	Red Filtrex Filter = grid
604113	White Permatex Filter
604138	Two Stage - Both Red and White Filters complete
HepaFlo Dust Bags	
604019	NVM 4BH Filter(Pack of 10)

Schematic NV 750S

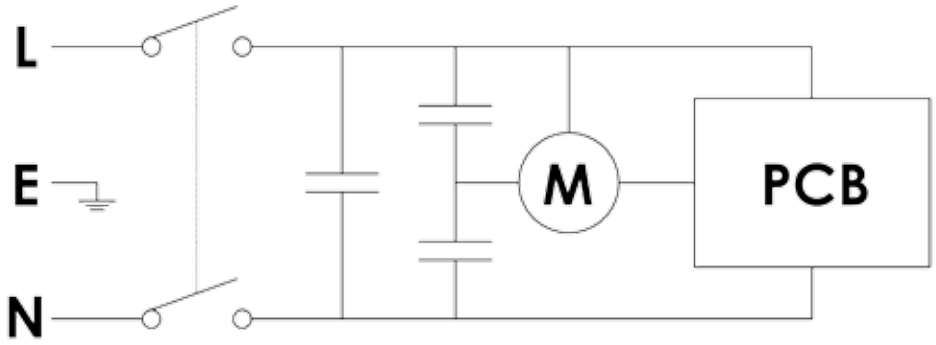

Schematic NVD 750S

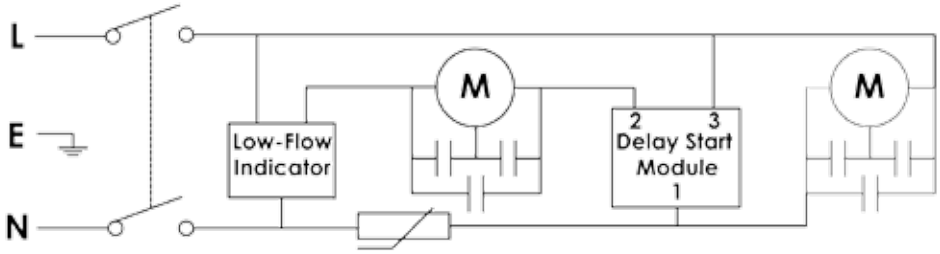

CE 16

EU DECLARATION OF CONFORMITY

We hereby declare under our sole responsibility that the following equipment fulfils all the relevant provisions of the following EU Directives:

Machinery Directive 2006/42/EC
EMC Directive 2014/30/EU
RoHS Directive 2011/65/EU

Machine Description: Vacuum Cleaner
Type: NV,NVD,NVQ,NVDQ series

Manufactured by: Numatic International Limited

Relevant standards upon which conformity is declared include:

IEC 60335-1:2010
IEC 60335-2-2:2009
IEC 60335-2-69:2002 +A1:2004 +A2:2007

EN 55014-1:2001 +A1:2001, +A2:2002
EN 55014-2:1997 +A1:2001 (Cat II)
EN 50366:2003 +A1:2006

A technical construction file for this equipment is retained at the manufacturer's address under the authorisation of the following signatory:

Name:Allyn Boyes Position: Technical Manager

Signed: Date: 20/04/2016

Numatic International Limited,
Chard , Somerset.
TA20 2GB
www.numatic.co.uk

GB

Numatic International

Warranty

Numatic International Limited warrant to the original purchaser that its products are free of defects in both material or workmanship for the period shown below:-

Homecare and Cleancare Vacuum cleaners	**2 Years**
Rotary Floor Machines	**2 Years**
Twintec Auto Scrubber Dryer	**1 Year**
Vario Ride-On Scrubber Dryer	**1 Year / 1500 hours**
Mopping, Compacts, Combi and Servocare Products	**1 Year**
Individual Accessories and Spare Parts	**6 Months**

Note: This warranty expressly excludes consumable parts such as carbon brushes, floor brushes, mops, batteries etc, that are considered replaceable from time to time during the normal working life of the machine.

A. The warranty period commences from the date the goods are purchased.

B. All warranty claims must be processed through the Dealer from whom the equipment was purchased. The Dealer will co-operate with the purchaser throughout the warranty claims procedure and will arrange any necessary repairs using genuine Numatic parts.

C. If the original Dealer is no longer able to fulfil his obligations please contact Numatic International Limited with full details of the claim and proof of purchase so that this may be processed without delay.

D. Any warranty claim can only relate to the specific part that is proven to be at fault and for which a replacement will be supplied but cannot be extended to constitute a claim against the complete machine.

E. Numatic International will supply the Dealer with any warranty parts required, subject to the claim being validated, after return of the faulty items in accordance with Numatic International Limited's General Conditions of Sale.

F. Claims will not be accepted if they are the result of fair wear and tear, misuse or abuse of any kind.

G. No replacement will be given unless the appropriate evidence of the validity of the claim has been provided to the satisfaction of Numatic International Limited.

H. Numatic International Limited reserve the right to charge for any unnecessary work carried out as a result of an invalid claim.

I. No variation to this warranty may be made or implied by any member of Numatic International Limited or its Dealers unless such variation is in writing and authorised by the Company

Numatic International Limited. Chard, Somerset, TA20 2GB
Telephone: 01460 68600 Fax: 01460 68458
© Numatic International Limited

AXMINSTER®
POWER TOOL CENTRE

Numatic International Limited, Chard, Somerset, TA20 2GB
Telephone: 01460 68600
Fax: 01460 68458

UNITED KINGDOM: www.numatic.co.uk GERMANY: www.numatic.de SWITZERLAND: www.numatic.ch
FRANCE: www.numatic.fr NETHERLANDS: www.numatic.nl SOUTH AFRICA: www.numatic.co.za
PORTUGAL: www.numatic.pt

Specification subject to change without prior notice

www.numatic.com © Numatic International Limited

903308 06/16 (A01)